Philips Consumer Electronics

Technical Service Data

Service and Quality
Service Publications Dept.
One Philips Drive
P.O. Box 14810
Knoxville, TN 37914

Manual 7602
Model no.: 20LX200125
First Publish: 5-10-2001
Rev. Date: 10-16-2002
Print Date: 06/04/2007

Pg. SCHEMATIC DIAGRAMS AND PC BOARDS

1. Chassis Overview
2. Power Supply Schematic - A1
3. Line Deflection Schematic - A2
4. Frame Deflection Schematic - A3
5. Tuner IF Schematic - A4
6. Video IF And Sound IF Schematic - A5
7. Synchronization Schematic - A6
8. Control Schematic - A7
9. Audio Amplifier Schematic - A8
10. NICAM + 2CS + BTSC Schematic - A9
11. Audio/Video Source Switching Schematic - A10
12. Audio - BTSC Stereo Decoder Schematic - A11
13. Front I/O + Control, Headphone Schematic - A12
14. Rear I/O Cinch Schematic - A13
15. CRT Panel Schematic - B
16. Side AV + Headphone Panel Schematic - C
17. Main Chassis PCB (Top View)
18. Main Chassis PCB (Bottom View)
19. CRT Panel PCB (Top View)
20. CRT Panel PCB (Bottom View)
21. Side AV + Headphone Panel PCB (Top View)

REFER TO SAFETY GUIDELINES

SAFETY NOTICE: ANY PERSON ATTEMPTING TO SERVICE THIS CHASSIS MUST FAMILIARIZE HIMSELF WITH THE CHASSIS AND BE AWARE OF THE NECESSARY SAFETY PRECAUTIONS TO BE USED WHEN SERVICING ELECTRONIC EQUIPMENT CONTAINING HIGH VOLTAGES.

CAUTION: USE A SEPARATE ISOLATION TRANSFORMER FOR THIS UNIT WHEN SERVICING

© Philips Electronics North America Corporation

Visit our World Wide Web Site at http://www.forceonline.com

Philips Consumer Electronics

Technical Service Data

Service and Quality
Service Publications Dept.
One Philips Drive
P.O. Box 14810
Knoxville, TN 37914

Manual 7602
Model no.: 20LX200125
First Publish: 5-10-2001
Rev. Date: 10-16-2002
Print Date: 06/04/2007

Mechanical Assembly

REFER TO SAFETY GUIDELINES

SAFETY NOTICE: ANY PERSON ATTEMPTING TO SERVICE THIS CHASSIS MUST FAMILIARIZE HIMSELF WITH THE CHASSIS AND BE AWARE OF THE NECESSARY SAFETY PRECAUTIONS TO BE USED WHEN SERVICING ELECTRONIC EQUIPMENT CONTAINING HIGH VOLTAGES.

CAUTION: USE A SEPARATE ISOLATION TRANSFORMER FOR THIS UNIT WHEN SERVICING

© Philips Electronics North America Corporation
Visit our World Wide Web Site at http://www.forceonline.com

Rear Cover Removal

1. Remove all fixation screws of the rear cover.
2. Now pull the rear cover backward to remove it.

Service Position Main Panel

1. Disconnect the strain relief of the AC power cord.
2. Remove the main panel, by pushing the two center clips outward [1]. At the same time pull the panel away from the CRT [2].
3. Disconnect the degaussing coil by removing the cable from (red) connector 0201.
4. Move the panel somewhat to the left and flip it 90 degrees [3], with the components towards the CRT.

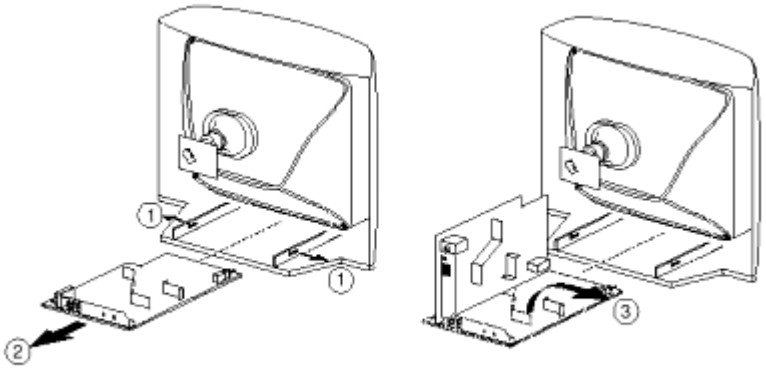

Side I/O Panel Removal

1. Remove the complete Side I/O assembly after unscrewing the 2 fixation screws.
2. Release the 2 fixation clamps and lift the board out of the bracket.

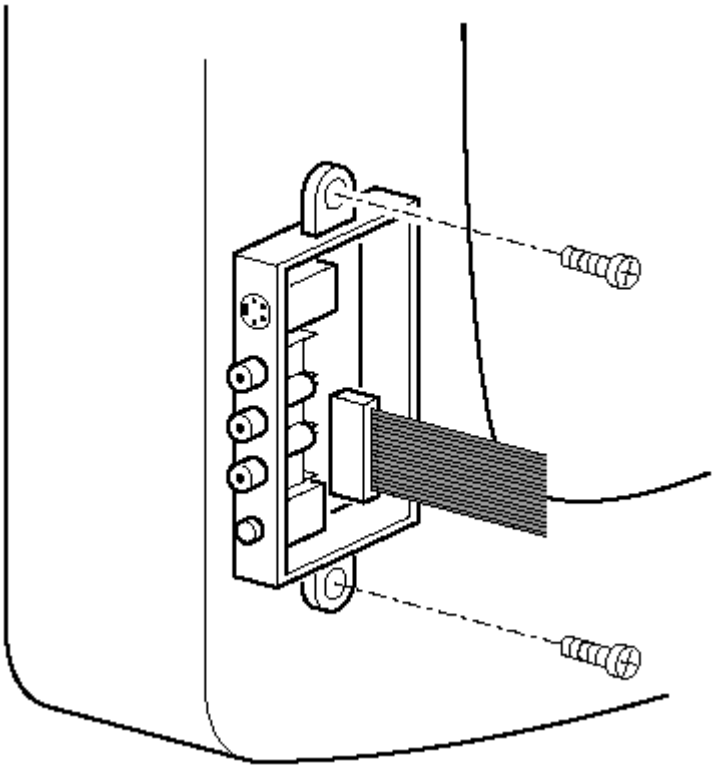

Rear Cover Mounting

Before you mount the rear cover, perform the following checks:

1. Check whether the AC power cord is mounted correctly in its guiding brackets.
2. Replace the strain relief of the AC power cord into the cabinet.
3. Check whether all cables are replaced in their original position.

Philips Consumer Electronics

Technical Service Data

Service and Quality
Service Publications Dept.
One Philips Drive
P.O. Box 14810
Knoxville, TN 37914

Manual 7602
Model no.: 20LX200125
First Publish: 5-10-2001
Rev. Date: 10-16-2002
Print Date: 06/04/2007

Mechanical Diagrams

REFER TO SAFETY GUIDELINES

SAFETY NOTICE: ANY PERSON ATTEMPTING TO SERVICE THIS CHASSIS MUST FAMILIARIZE HIMSELF WITH THE CHASSIS AND BE AWARE OF THE NECESSARY SAFETY PRECAUTIONS TO BE USED WHEN SERVICING ELECTRONIC EQUIPMENT CONTAINING HIGH VOLTAGES.

CAUTION: USE A SEPARATE ISOLATION TRANSFORMER FOR THIS UNIT WHEN SERVICING

© Philips Electronics North America Corporation
Visit our World Wide Web Site at http://www.forceonline.com

TYPICAL TABLE MODEL EXPLODED VIEW

REF.		DESCRIPTION
AC01	⚠	AC Power Cord
AC02	⚠	Anode Clip
AC03		Cabinet Back
AC04		Cabinet Front
AC05		Chassis Guide
AC06		Control Buttons
AC07	⚠	Convergence and Purity Assembly
AC08	⚠	CRT
AC09	⚠	Degaussing Coil
AC10		Degaussing Coil Holder (4 Used)
AC11		Light Guide
AC12		Nameplate
AC13		Owner's Manual
AC14		Power Button
AC15		Remote Transmitter
AC16		Speaker
AC17		Strain Relief for AC Cord
AC18	⚠	Yoke
AC19		Yoke Wedge
AC20		AC Adaptor (Not Shown)
AC21		Batteries for Remote Transmitter (Not Shown)
AC22		Card Door Cover (Not Shown)
AC23		Card Housing (Not Shown)
AC24		Degaussing Coil Spring (Not Shown)
AC25		Instruction Sheet (Not Shown)
AC26		Jack Panel, Plastic (Not Shown)
AC27		OCV Card Door Cover (Not Shown)
AC28		RF Cable (Not Shown)
AC29		Vent Cover (Not Shown)
AC30		Extra Power Supply Bracket (Not Shown)
AC31		Extra Power Supply Module (Not Shown)
AC32		Assembly Braid (Not Shown)
AC33		Cabinet Door (Not Shown)

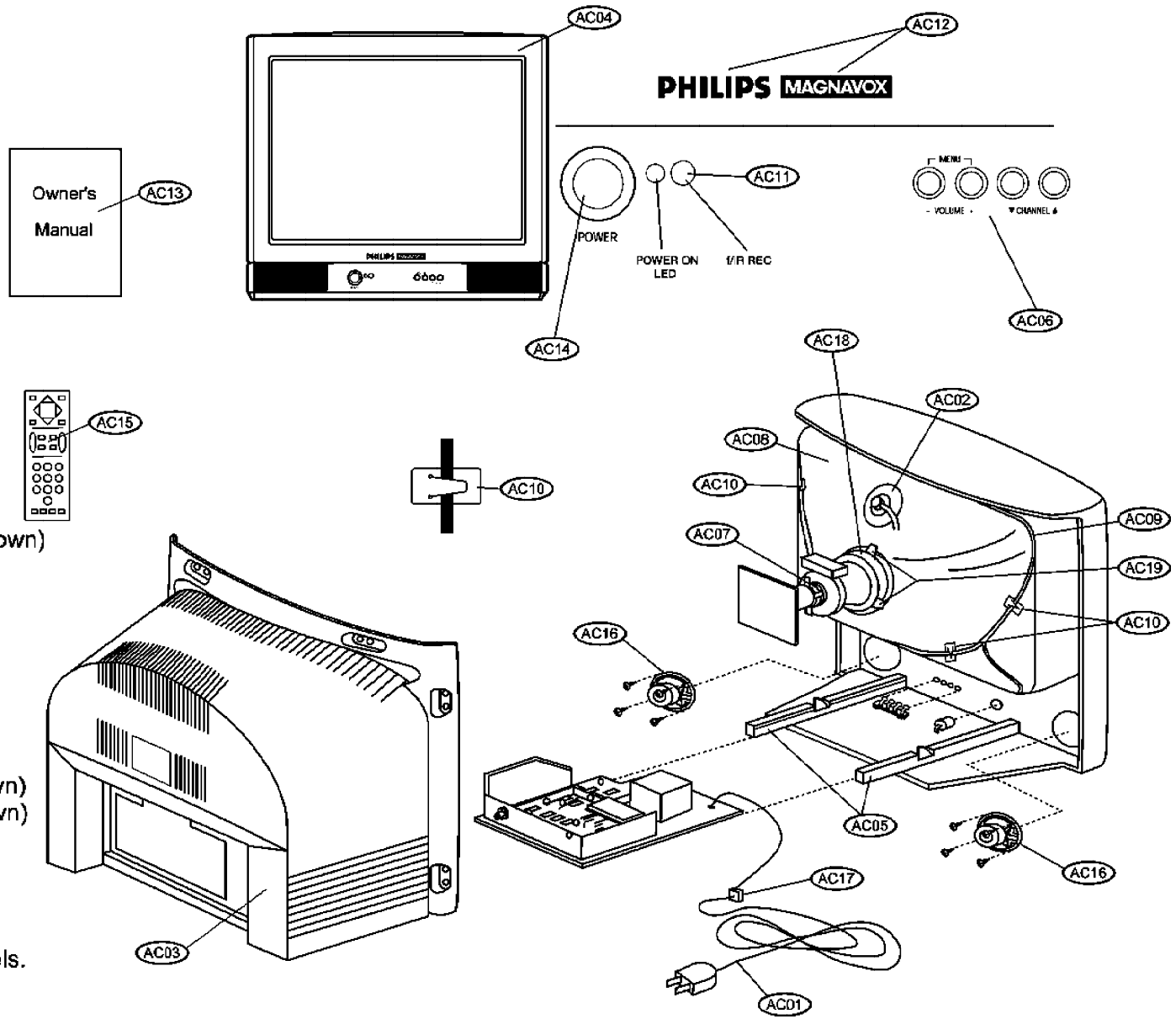

Note: Some parts listed are not available in all models.

Philips Consumer Electronics

Technical Service Data

Service and Quality
Service Publications Dept.
One Philips Drive
P.O. Box 14810
Knoxville, TN 37914

Manual 7602
Model no.: 20LX200125
First Publish: 5-10-2001
Rev. Date: 10-16-2002
Print Date: 06/04/2007

Troubleshooting

REFER TO SAFETY GUIDELINES

SAFETY NOTICE: ANY PERSON ATTEMPTING TO SERVICE THIS CHASSIS MUST FAMILIARIZE HIMSELF WITH THE CHASSIS AND BE AWARE OF THE NECESSARY SAFETY PRECAUTIONS TO BE USED WHEN SERVICING ELECTRONIC EQUIPMENT CONTAINING HIGH VOLTAGES.

CAUTION: USE A SEPARATE ISOLATION TRANSFORMER FOR THIS UNIT WHEN SERVICING

© Philips Electronics North America Corporation *Visit our World Wide Web Site at http://www.forceonline.com*

Service Modes, Error Codes And Fault Finding

Test Points

The chassis is equipped with test points printed on the circuit board assemblies. These test points refer to the functional blocks:

Test point	Circuit	Diagram
A1-A2-A3-..	Audio processing	A8, A9 / A11
C1-C2-C3-..	Control	A7
F1-F2-F3-..	Frame drive and output	A3
I1-I2-I3-..	Tuner & IF	A4
L1-L2-L3-..	Line drive and output	A2
P1-P2-P3-..	Power supply	A1
S1-S2-S3-..	Synchronization	A6
V1-V2-V3-..	Video processing	A5, B1

The numbering is in a logical sequence for diagnostics.
Always start diagnosing within a functional block in the sequence of the relevant test points for that block.
Perform measurements under the following conditions:

- Service Default Mode.
- Video: color bar signal.
- Audio: 3 kHz left, 1 kHz right.

Service Modes

Service Default Mode (SDM) and Service Alignment Mode (SAM) offer several features for the service technician, while the Customer Service Mode (CSM) is used for communication between dealer and customer.
Note: Some L8 and M8 chassis sets use a software version that does not contain the Service Modes (see table). In this case, use the special Factory Mode Remote Control. This can be ordered by service code 4835 310 57511. Complete instructions are included. This remote control will place the TV in the Factory Mode and allow access to all adjustments that a normal Service Mode contains (including setting Option Bytes). Error codes will not be available. There is also the option of using ComPair, a hardware interface between a computer (see requirements) and the TV chassis. It offers the ability of structured trouble shooting, error code reading and software version readout for all L8 and M8 chassis.
Requirements: To run ComPair on a computer (laptop or desktop) requires, as a minimum, a 486 processor, Windows 3.1 and a CD-ROM drive. A Pentium Processor and Windows 95/98 are also acceptable (see also ***ComPair).***

SW. cluster	Softwar name	UOC type	Diversity	Remark
1US0	L01UN0-x.y	TDA9587	Stereo,	All Servioce

1US0	L01UN0-x.y	TDA9587	Stereo, non-DBX, CC	All Servioce Modes
1US1	L01US1-x.y	TDA9587/ TDA9588	Stereo,-DBX CC	Only Com-Pair (*)
2US0	L01UM0-x.y	TDA9587	Mono, CC	All Service Modes
2US1	L01UM1-x.y	TDA9587	Mono, CC	Without CSM (*)
3US0	L01US0-x.y	TDA9588	Stereo,-DBX CC	Only Con-Pair (*)
3US1	L01UN1-x.y	TDA9587	Stereo, non-DBX, CC	Without CSM (*)
Abbreviations in “Software Name”: U=USA, N=Stereo non-DBX, S=Stereo DBX, M=Mono				

Service Default Mode (SDM)

Purpose

- To create a predefined setting to get the same measurement results as given in this manual.
- To override SW protections.
- To start the blinking LED procedure.

Specifications

- Tuning frequency: 61.25 MHz (channel 3).
- Color system: NTSC.
- All picture settings at 50 % (brightness, color contrast, hue).
- Bass, treble and balance at 50 %; volume at 25 %.
- All service-unfriendly modes (if present) are disabled, like:
  - (sleep) timer,
  - child/parental lock,
  - blue mute,
  - hotel/hospitality mode
  - auto switch-off (when no 'IDENT' video signal is received for 15 minutes),
  - skip / blank of non-favorite presets / channels,
  - auto store of personal presets,
  - auto user menu time-out.

How to enter SDM

- Use a standard customer RC-transmitter and key in the code 062596 directly followed by the MENU button, or
- Short wires 9631 and 9641 on the mono carrier and switch the set ON apply AC power. Then press the power button (remove short after start-up).
  Caution: Entering SDM by shorten wires 9631 and 9641 will override the +8V-protection. Do this only for a short period. When doing this, the service-technician must know exactly what he is doing, as it could lead to damaging

After entering SDM, the following screen is visible, with SDM at the upper right side for recognition.

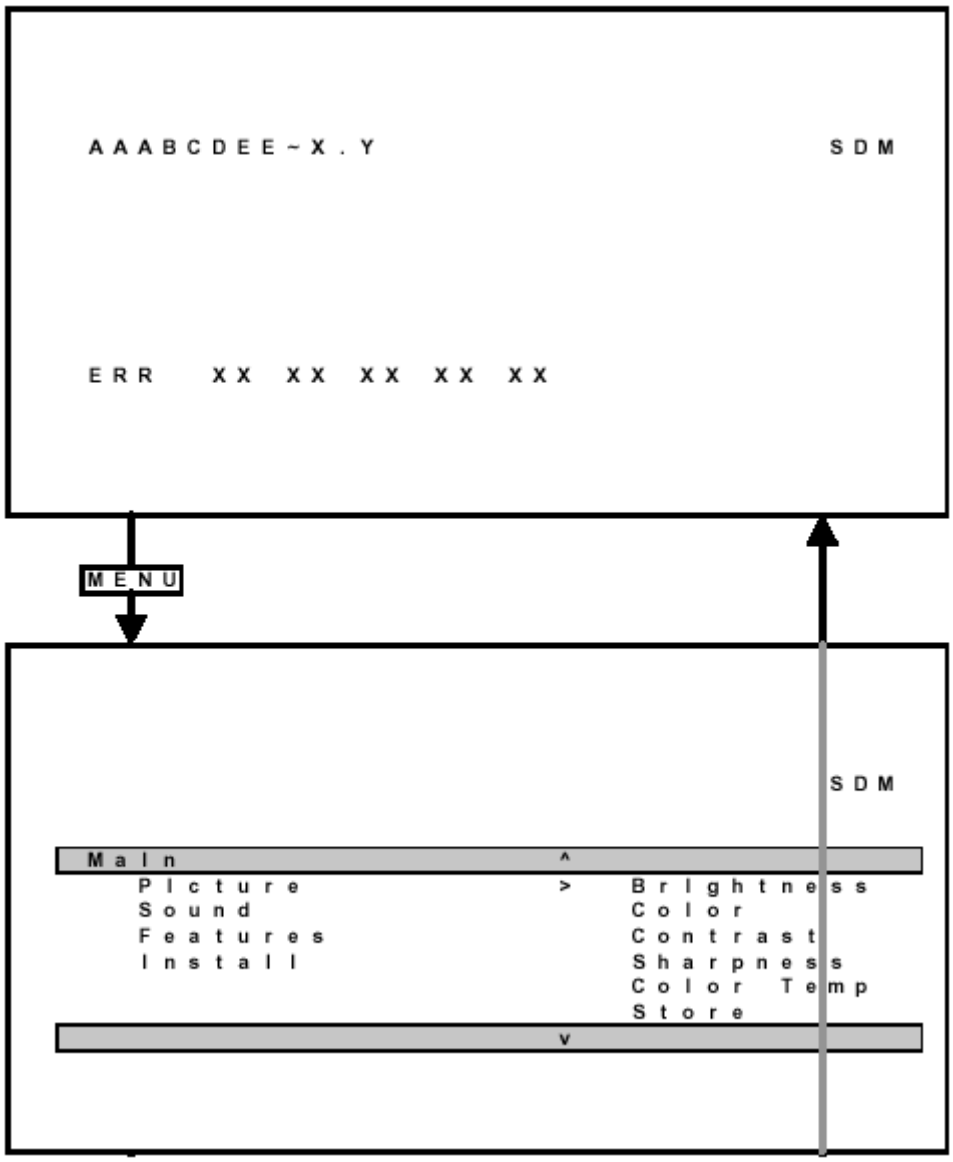

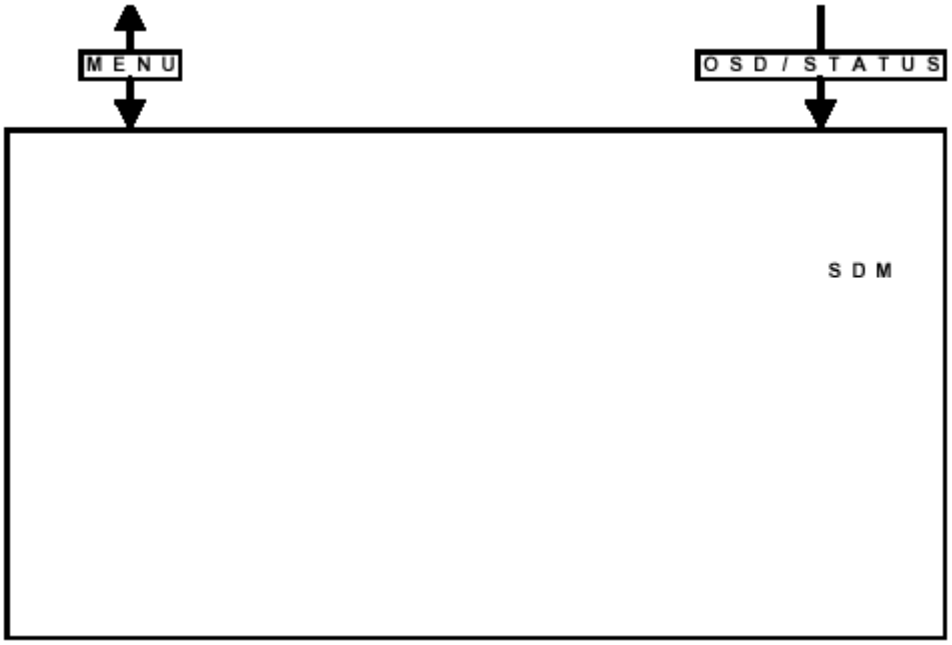

How to navigate

- When you press the MENU button on the remote control, the set will switch between the SDM and the normal user menu (with the SDM mode still active in the background). Return to the SDM screen with the OSD / STATUS button.
- When you press the OSD / STATUS button on the remote control, the menu will show or hide the error buffer. This feature is available to prevent interference during waveform measurements.
- On the TV press and hold the 'VOLUME down' and press the 'CHANNEL down' for a few from SDM to SAM and reverse.

How to exit

Switch the set to STANDBY by pressing the power button on the remote control transmitter (if you switch the set OFF by removing the AC power, the set will return in SDM when AC power is re-applied). The error buffer is cleared.

Service Alignment Mode (SAM)

Purpose

- To perform alignments.
- To change option settings.
- To display / clear the error code buffer.

Specifications

- Operation hours counter.
- Software version.
- Option settings.
- Error buffer reading and erasing.
- Software alignments.

How to enter

- Use a standard customer RC-transmitter and key in the code 062596 directly followed by the OSD / STATUS button or
- Via ComPair.

The following screen is visible, with SAM at the upper right side for recognition.

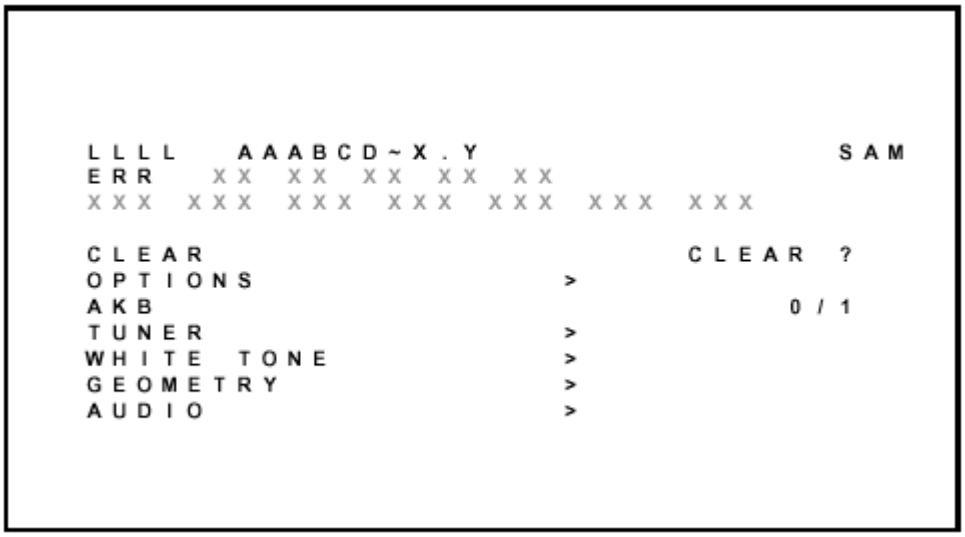

1. LLLL This is the operation hours counter. It counts the normal operation hours, not the standby hours.
2. AAABCD-X.Y This is the software identification of the main micro controller
   - A = the project name (L01).
   - B = the region: E = Europe, A = Asia Pacific, U = NAFTA, L = LATAM.
   - C = the software diversity: N = stereo non-DBX, S = stereo DBX, M = mono, D = DVD.
   - D = the language cluster number.
   - E = UOC diversity.
   - X = the main software version number.
   - Y = the sub software version number.
3. SAM Indication of the actual mode.
4. Errors buffer Five errors possible.
5. Option bytes Seven codes possible.
6. Clear Erase the contents of the error buffer. Select the CLEAR menu item and press the CURSOR RIGHT key. The content of the error buffer is cleared.
7. Options To set the Option Bytes. See chapter 8.3.1 for a detailed description.
8. AKB Disable (0) or enable (1) the 'black current loop' (AKB = Auto Kine Bias).
9. Tuner To align the Tuner. See chapter 8.3.2 for a detailed description.
10. White Tone To align the White Tone. See ***White tone*** for a detailed description.
11. Geometry To align the set geometry. See ***Geometry*** for a detailed description.
12. Audio No audio alignment is used for NTSC.

How to navigate

- In SAM, select menu items with the CURSOR UP/DOWN key on the remote control transmitter. The selected item will be highlighted. When not all menu items fit on the screen, move the CURSOR UP/DOWN key to display the next / previous menu items.

- With the CURSOR LEFT/RIGHT keys, it is possible to:
  - (De)activate the selected menu item.
  - Change the value of the selected menu item.
  - Activate the selected submenu.
- When you press the MENU button twice, the set will switch to the normal user menus (with the SAM mode still active in the background). To return to the SAM menu press the OSD / STATUS button [i+].
- When you press the MENU key in a submenu, you will return to the previous menu.

How to exit

Switch the set to STANDBY by pressing the power button on the remote control transmitter (if you switch the set OFF by removing the AC power, the set will return in SAM when AC power is re-applied). The error buffer is not cleared.

Customer Service Mode (CSM)

Purpose

The Customer Service Mode is (de-)activated by the customer upon request of the service technician during a telephone conversation, in order to identify the status of the set. This CSM is a read only mode, therefore modifications in this mode are not possible.

How to enter

The CSM will be turned on after pressing the MUTE key on the remote control transmitter and any of the control buttons on the TV for at least 4 seconds simultaneously. This activation only works if there is no menu on the screen. After switching ON the Customer Service Mode, the following screen will appear:

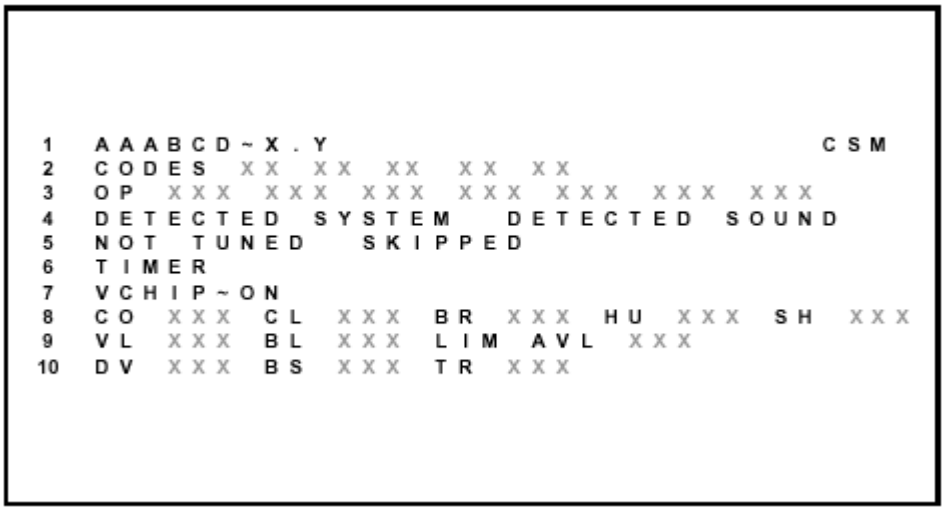

1. Software identification of the main micro controller (see ***Service Alignment Mode*** for an explanation).
2. Error code buffer (see for more details). Displays the last seven errors of the error code buffer.
3. In this line, the Option Bytes (OB) are visible. Each Option Byte is displayed as a decimal number between 0 and 255. The set may not work correctly when an incorrect option code is set. See ***Options*** for more information on the option settings.
4. Indicates which color and sound system is installed for the selected pre-set.
5. Indicates if the set is not receiving an 'IDENT' signal on the selected source. It will display 'Not Tuned'.

6. Indicates if the sleep timer is enabled.
7. Indicates if the V-chip feature is enabled.
8. Value indicates parameter levels at CSM entry.
   CO = CONTRAST, CL = COLOR, BR = BRIGHTNESS,
   HU = HUE, SH = SHARPNESS
9. Value indicates parameter levels at CSM entry.
   VL = VOLUME LEVEL, BL = BALANCE LEVEL, AVL LIM
   = AUTO VOLUME LEVEL LIMITER
10. Value indicates parameter levels at CSM entry.
    DV = DELTA VOLUME, BS = BASS LEVEL, TR = TREBLE LEVEL

How to exit

You can turn the Customer Service Mode off:

- After you press 'any' key of the remote control transmitter with exception of the CHANNEL and VOLUME keys.
- After you switch-off the TV set with the AC power switch.

Problems And Solving Tips (Related To CSM)

Picture Problems

No colors / noise in picture

Check CSM line 4. Wrong color system installed. To change the setting:

1. Select the MANUAL STORE sub menu.
2. Select and change the SYSTEM setting until picture and sound are correct.
3. Select the STORE menu item.

Colors not correct / unstable picture

Check CSM line 4. Wrong color system installed. To change the setting:

1. Press the MENU button on the remote control.
2. Select the INSTALL sub menu.
3. Select the MANUAL STORE sub menu.
4. Select and change the SYSTEM setting until picture and sound are correct.
5. Select the STORE menu item.

TV switches off or changes channel without any user action

The TV set switches off after TV SWITCHING OFF was displayed.
Auto standby switched the set off because:

- There was no 'ident' signal for more than 15 minutes or
- There was no remote control signal received or local key pressed for > 2 hours.

See ***Alignments***for a description of the options to enable / disable auto standby

Picture too dark or too bright

Increase / decrease the BRIGHTNESS and / or the CONTRAST value when:

- The picture improves after you have pressed the 'Smart Picture' button on the remote control.
- The picture improves after you have switched on the Customer Service Mode

The new 'Personal' preference value is automatically stored.

White line around picture elements and text

Decrease the SHARPNESS value when:

- The picture improves after you have pressed the 'Smart Picture' button on the remote control.
- The picture improves after you have switched on the Customer Service Mode

The new 'Personal' preference value is automatically stored.

Snowy picture

Check CSM line 5. If this line indicates 'Not Tuned', check the following:

- No or bad antenna signal. Connect a proper antenna signal.
- Antenna not connected. Connect the antenna.
- No channel / preset is stored at this program number. Go to the INSTALL menu and store a proper channel at this program number.
- The tuner is faulty (in this case the CODES line will contain error number 10). Check the tuner and replace / repair if necessary.

Snowy picture and/or unstable picture

- A scrambled or decoded signal is received.

Black and white picture

Increase the COLOR value when:

- The picture improves after you have pressed the 'Smart Picture' button on the remote control.
- The picture improves after you have switched on the Customer Service Mode

The new 'Personal' preference value is automatically stored.

Menu text not sharp enough

Decrease the CONTRAST value when:

- The picture improves after you have pressed the 'Smart Picture' button on the remote control.
- The picture improves after you have switched on the Customer Service Mode

The new 'Personal' preference value is automatically stored.

Sound Problems

No sound or sound too loud (after channel change / switching on)
Increase / decrease the VOLUME level when the volume is OK after you switched on the CSM. The new 'Personal' preference value is automatically stored.

ComPair

Introduction

ComPair (Computer Aided Repair) is a service tool for Philips Consumer Electronics products. ComPair is a further development on the European DST (service remote control), which allows faster and more accurate diagnostics. Compare has three big advantages:

- ComPair helps you to quickly get an understanding on how to repair the chassis in a short time by guiding you systematically through the repair procedures.
- ComPair allows very detailed diagnostics (on I^2C level) and is therefore capable of accurately indicating problem areas. You do not have to know anything about I^2C commands yourself because ComPair takes care of this.
- ComPair speeds up the repair time since it can automatically communicate with the chassis (when the

microprocessor is working) and all repair information is directly available. When ComPair is installed together with the SearchMan electronic manual of the defective chassis, schematics and PWBs are only a mouse click away.

Specifications

ComPair consists of a Windows based faultfinding program and an interface box between PC and the (defective) product. The ComPair interface box is connected to the PC via a serial or RS232 cable.
In case of the L8/M8 chassis, the ComPair interface box and the TV communicate via a bi-directional service cable via the service connector (located on the Main panel, see Hardware alignments suffix D).

The ComPair faultfinding program is able to determine the problem of the defective television. ComPair can gather diagnostic information in two ways:

1. **Automatic (by communication with the television)**
   ComPair can automatically read out the contents of the entire error buffer. Diagnosis is done on I^2C level. ComPair can access the I^2C bus of the television. ComPair can send and receive I^2C commands to the micro controller of the television. In this way, it is possible for ComPair to communicate (read and write) to devices on the I^2C busses of the TV-set.
2. **Manually (by asking questions to you)**
   Automatic diagnosis is only possible if the micro controller of the television is working correctly and only to a certain extend. When this is not the case, ComPair will guide you through the faultfinding tree by asking you questions (e.g. Does the screen gives a picture? Click on the correct answer: YES / NO) and showing you examples (e.g. Measure test-point I7 and click on the correct oscillogram you see on the oscilloscope). You can answer by clicking on a link (e.g. text or a waveform picture) that will bring you to the next step in the faultfinding process.

By a combination of automatic diagnostics and an interactive question / answer procedure, ComPair will enable you to find most problems in a fast and effective way.
Beside fault finding, ComPair provides some **additional features** like:

- Up- or downloading of presets.
- Managing of preset lists.
- Emulation of the (European) Dealer Service Tool (DST).
- If both ComPair and SearchMan (Electronic Service Manual) are installed, all the schematics and the PWBs of the set are available by clicking on the appropriate hyperlink.

Example: *Measure the DC-voltage on capacitor C2568 (Schematic/Panel) at the Monocarrier.*
Click on the 'Panel' hyperlink to automatically show the PWB with a highlighted capacitor C2568.
Click on the 'Schematic' hyperlink to automatically show the position of the highlighted capacitor.

How To Connect

1. First install the ComPair Browser software (see the Quick Reference Card for installation instructions).
2. Connect the RS232 interface cable between a free serial (COM) port of your PC and the PC connector (marked with 'PC') of the ComPair interface.
3. Connect the AC power adapter to the supply connector (marked with 'POWER 9V DC') on the compare interface.
4. Switch the ComPair interface OFF.
5. Switch the television set OFF, remove the AC power.
6. Connect the ComPair interface cable between the connector on the rear side of the ComPair interface (marked with 'I^2C') and the ComPair connector on the mono carrier (see figure 8-1 suffix D).
7. Plug the AC power adapter in the AC power outlet and switch on the interface. The green and red LEDs light up

together. The red LED extinguishes after approx. 1 second while the green LED remains lit.

8. Start the ComPair program and read the introduction chapter.

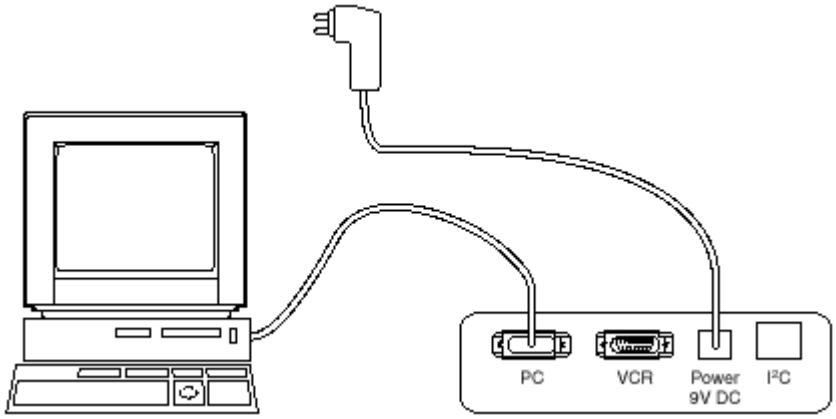

How To Order

ComPair order codes:

- Starter kit ComPair + SearchMan software + compare interface (excluding transformer): 4822 727 21629
- ComPair interface (excluding transformer): 4822 727 21631
- Starter kit ComPair software (registration version): 4822 727 21634
- Starter kit SearchMan software: 4822 727 21635
- ComPair CD (update): 4822 727 21637
- SearchMan CD (update): 4822 727 21638
- ComPair interface cable: 3122 785 90004

Error Codes

Introduction

The error code buffer contains all errors detected since the last time the buffer was erased. The buffer is written from left to right. When an error occurs that is not yet in the error code buffer, it is written at the left side and all other errors shift one position to the right.
The error code buffer is cleared in the following cases:

- By activation of the CLEAR command in the SAM menu:
- When you exit SDM / SAM with the STANDBY command on the remote control (when leaving SDM / SAM, by disconnecting the set from AC power, the error buffer is not reset).
- When you transmit the command DIAGNOSE-99-OK with ComPair.
- If the content of the error buffer has not changed for 50 hours, it resets automatically.

Examples:
ERROR: 0 0 0 0 0: No errors detected.
ERROR: 6 0 0 0 0: Error code 6 is the most recent and only detected error.
ERROR: 9 6 0 0 0: Error code 6 was first detected and error code 9 is the most recent detected error.
You can also make the contents of the error buffer visible via the blinking LED procedure (see ***The Blinking LED Procedure***This is especially useful when there is no picture.

Error Codes

In case of non-intermittent faults, clear the error buffer before you begin the repair. These to ensure that old error codes are no longer present.
If possible, check the entire contents of the error buffer. In some situations an error code is only the result of another error code and not the actual cause (e.g., a fault in the protection detection circuitry can also lead to a protection).

E	Device	Error description	Symptom	Check	Diagram
0	-	No Error	-	-	-
1	-	X-Ray / over-voltage protection	Set will hiccup until it goes to protection mode	2407 & 7402 (L8),2465 & 7460 (M8)	A2
2	-	High beam current		CRT panel, 3340	B1, B2
	-	Horizontal Protection	Set will hiccup until it goes to protection mode-Fly back line after 5 s in protection mode	+200V, LOT 5445, 7460-7463, 6467, hor. Defl. Coil	A2
3	TDA8359/ TDA9302	Vertical Protection	Set will hiccup until it goes to protection mode-One hor. Line after 5 s in protection mode	ViotlAux +13V, +50V (M8) 7471, vert. Defk, Coil	A2, A3
4	MSP34X5/ TDA9853	MSP I^2C identification error	Set turned on without sound output	ViotlAux +5V, +8V,7831,3823/33, 7861,3865/66	A9 or A11
5	TDA95xx	POR / +8V protection	Set will hiccup until it goes to protection mode after 8 s	3V3, +8V, 7200, 7560, 7480	A5-A7, A1, A2
6	I^2C bus	General I^2C bus error	Set is in protection mode	SDA/SCL, 1000, 7200, 7600/01, 3624/25	A7
7	AN7522/3	Power down (over current) protection	Set will hiccup until it goes to protection mode	MainAux, 7901/02, 7561/62	A8, A1
8	-	E/W protection (Large Screen)	Geometry wrong or set in protection mode	ViotAux+11V, 3400, 3405/06, 7400	A2
9	M24C08	NVM I^2C identification error	Set will turn on but is unable to store data	3V3, 7601/02, 3611, 3603/04	A7
10	Tuner	Tuner I^2C identification error	Set will turn on but has no picture and sound	ViotlAux +5V, 1100, 7482	A4, A2
11	TDA6107/8	Black current loop protection	Fly back line after 5 s in protection mode	+200V, 7330, RGB amps, CRT	B1, B2
12	M65669	PIP I^2C identification error	Picture in picture does not function	+5V, +8V, 7803, 7890/91	P

The Blinking LED Procedure

Via this procedure you can make the contents of the error buffer visible via the front LED. This is especially useful when there is no picture.

When the SDM is entered, the LED will blink the contents of the error-buffer.

Error-codes ≥ 10 are shown as follows:
- a long blink of 750 ms (which is an indication of the decimal digit),
- a pause of 1.5 s,
- n short blinks (n = 1 - 9),
- when all the error-codes are displayed, the sequence finishes with a LED blink of 3 s,
- the sequence starts again.

Example of error buffer: 12 9 6 0 0
After entering SDM:
- 1 long blink of 750 ms followed by a pause of 1.5 s,
- 2 short blinks followed by a pause of 3 s,
- 9 short blinks followed by a pause of 3 s,
- 6 short blinks followed by a pause of 3 s,
- 1 long blink of 3 s to finish the sequence,
- the sequence starts again.

Protections

If a fault situation is detected an error code will be generated and if necessary the set will be put in the protection mode.
Blinking of the red LED at a frequency of 3 Hz indicates the protection mode. In some error cases the microprocessor does not put the set in the protection mode. The error codes of the error buffer can be read via the service menu (SAM), the blinking LED procedure or via ComPair. The DST diagnose functionality will force the set into the Service-standby, which is similar to the usual standby mode, however the microprocessor has to remain in normal operation completely.
To get a quick diagnosis the chassis has three service modes implemented:
- The Customer Service Mode (CSM).
- The Service Default Mode (SDM). Start-up of the set in a predefined way.
- The Service Alignment Mode (SAM). Adjustment of the set via a menu and with the help of test patterns.

See for a detailed description ***Circuit description***

Repair Tips

Below some failure symptoms are given, followed by a repair tip.
- **Set is dead and makes hiccuping sound**
  'MainSupply' is available. Hiccupping stops when de-soldering L5561, meaning that problem is in the 'MainSupply' line. No output voltages at LOT, no horizontal deflection. Reason: line transistor 7460 is defective.
- **Set is dead, and makes no sound**
  Check power supply IC 7520. Result: voltage at pins 1, 3, 4, 5 and 6 are about 180 V and pin 8 is 0 V. The reason why the voltage on these pins is so high is because the output driver (pin 6) has an open load. That is why MOSFET 7521 is not able to switch. Reason: feedback resistor 3523 is defective. Caution: be careful measuring on the gate of 7521; circuitry is very high ohmic and can easily be damaged!
- **Set is in hiccup mode and shuts down after 8 s.**
  Blinking LED (set in SDM mode) indicates error 5. As it is unlikely that ?P 'POR' and '+8V protection' happen at the same time, measure the '+8V'. If this voltage is missing, check transistor 7480.

- **Set is non-stop in hiccup mode**
  Set is in over current mode; check the secondary sensing (opto coupler 7515) and the 'MainSupply' voltage. Signal 'Stdby_con' must be logic low under normal operation conditions and goes to high (3.3 V) under standby and fault conditions.
- **Set turns on, but without picture and sound**
  The screen shows snow, but OSD and other menus are okay. Blinking LED procedure indicates error 11, so problem is expected in the tuner (pos. 1000). Check presence of supply voltages. As 'Vlotaux+5V' at pin 5 and 7 are okay, 'VT_supply' at pin 9 is missing.
  Conclusion: resistor 3460 is defective.
- **Set turns on, but with a half screen at the bottom.**
  Sound is okay
  Blinking LED (set in SDM mode) indicates error 3. Check 'Vlotaux+11V' and '+50V'. If they are okay, problem is expected in the vertical amplifier IC 7471. Measure with a scope the waveform on pin 17 of the UOC. Measure also at pin 1 of IC 7471. If here the signal is missing, a defective resistor R3244 causes the problem.

Philips Consumer Electronics

Technical Service Data

Service and Quality
Service Publications Dept.
One Philips Drive
P.O. Box 14810
Knoxville, TN 37914

Manual 7602
Model no.: 20LX200125
First Publish: 5-10-2001
Rev. Date: 10-16-2002
Print Date: 06/04/2007

General Information

REFER TO SAFETY GUIDELINES

SAFETY NOTICE: ANY PERSON ATTEMPTING TO SERVICE THIS CHASSIS MUST FAMILIARIZE HIMSELF WITH THE CHASSIS AND BE AWARE OF THE NECESSARY SAFETY PRECAUTIONS TO BE USED WHEN SERVICING ELECTRONIC EQUIPMENT CONTAINING HIGH VOLTAGES.

CAUTION: USE A SEPARATE ISOLATION TRANSFORMER FOR THIS UNIT WHEN SERVICING

© Philips Electronics North America Corporation
Visit our World Wide Web Site at http://www.forceonline.com

GENERAL INFORMATION

L8 Chassis, Manual 7602

Note: For Service Information covering Commercial/Institutional Models, refer to Manual 7602C.

Technical Specifications

Audio ratings

1 W mono
2 x 1 W non-DBX stereo (LC stereo)
2 x 3 W DBX stereo (with SAP)

Reception

Tuning system	: PLL
Color systems	: NTSC
Sound systems	: FM-mono
	: BTSC non-DBX
	BTSC DBX
A/V connections	: NTSC M
Channel selections	: 181 channels, full cable
IF frequency	: 45.75 MHz
Aerial input	: 75 Ω, Coax

Miscellaneous

AC voltage	: 90 - 140 V (±10 %)
AC frequency	: 60 Hz (±5 %)
Ambient temperature	: + 5 to + 45 deg. C
Maximum humidity	: 90 %
Power consumption	: 36 W (14")
	100 W (32")
Standby Power consumption	: < 3 W

Connections

Front Or Top Control, Front Or Side Connections

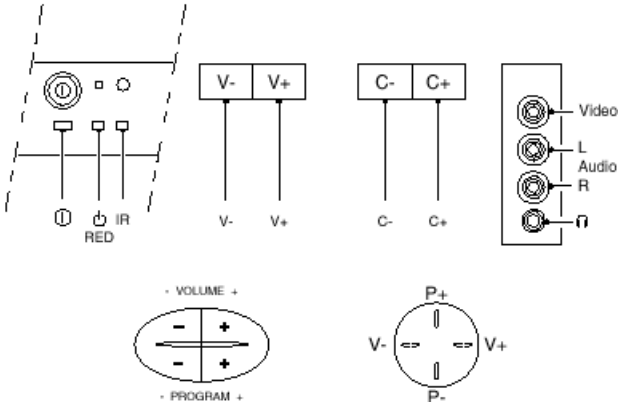

Audio / Video In

1 - Video 1	Vpp / 75 Ω	
2 - Audio L	(0.2 Vrms / 10 kΩ)	
3 - Audio R	(0.2 Vrms / 10 kΩ)	
4 - Headphone		
(3.5 mm) 8 - 600 Ω/ 4 mW		

Rear Connections

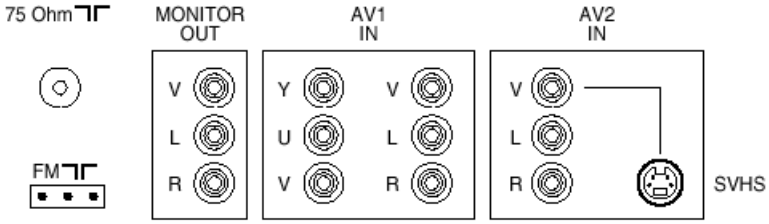

Monitor Out

1 - Video	1 Vpp / 75 Ω	
2 - Audio	L (0.5 Vrms / 1 kΩ)	
3 - Audio	R (0.5 Vrms / 1 kΩ)	

YUV In

1 - Y	0.7 Vpp / 75 Ω	
2 - U	0.7 Vpp / 75 Ω	
3 - V	0.7 Vpp / 75 Ω	

AV1 In

4 - Video	1 Vpp / 75 Ω	
5 - Audio	L (0.5 Vrms / 10 kΩ)	
6 - Audio	R (0.5 Vrms / 10 kΩ)	

AV2 In

1 - Video	1 Vpp / 75 Ω	
2 - Audio	L (0.5 Vrms / 10 kΩ)	
3 - Audio	R (0.5 Vrms / 10 kΩ)	

AV2 In (SVHS)

1 -	gnd	⊥
2 -	gnd	⊥
3 - Y	1 Vpp / 75 Ω	⊖
4 - C	0.3 Vpp / 75 Ω	⊖

Safety Instructions For Repairs

Safety regulations require that during a repair:

- Due to the 'hot' parts of this chassis, the set must be connected to the AC power via an isolation transformer.
- Safety components, indicated by the symbol , should be replaced by components identical to the original ones.
- When replacing the CRT, safety goggles must be worn.

Safety regulations require that after a repair, the set must be returned in its original condition. Pay particular attention to the following points:

- General repair instruction: as a strict precaution, we advise you to re-solder the solder connections through which the horizontal deflection current is flowing, in particular:
  - all pins of the line output transformer (LOT)
  - fly-back capacitor(s)
  - S-correction capacitor(s)
  - line output transistor
  - pins of the connector with wires to the deflection coil
  - other components through which the deflection current flows.

Note: This re-soldering is advised to prevent bad connections due to metal fatigue in solder connections and is therefore only necessary for television sets more than two years old.

- Route the wire trees and EHT cable correctly and secure them with the mounted cable clamps.
- Check the insulation of the AC power cord for external damage.
- Check the strain relief of the AC power cord for proper function, to prevent the cord from touching the CRT, hot components, or heat sinks.
- Check the electrical DC resistance between the AC plug and the secondary side (only for sets that have an isolated power supply). Do this as follows:
  1. Unplug the AC power cord and connect a wire between the two pins of the AC plug.
  2. Turn on the main power switch (keep the AC power cord unplugged!).
  3. Measure the resistance value between the pins of the AC plug and the metal shielding of the tuner or the aerial connection of the set. The reading should be between 4.5 MΩ and 12 MΩ.
  4. Switch the TV OFF and remove the wire between the two pins of the AC plug.
- Check the cabinet for defects, to prevent the possibility of the customer touching any internal parts.

Maintenance Instructions

It is recommended to have a maintenance inspection carried out by qualified service personnel. The interval depends on the usage conditions:

- When the set is used under normal circumstances, for example in a living room, the recommended interval is three to five years.

- When the set is used in an environment with higher dust, grease or moisture levels, for example in a kitchen, the recommended interval is one year.
- The maintenance inspection includes the following actions:

1. Perform the 'general repair instruction' noted above.
2. Clean the power supply and deflection circuitry on the chassis.
3. Clean the picture tube panel and the neck of the picture tube.

Warnings

- In order to prevent damage to ICs and transistors, avoid all high voltage flashovers. In order to prevent damage to the picture tube, use the method shown in figure below, to discharge the picture tube. Use a high voltage probe and a multi-meter (position VDC). Discharge until the meter reading is 0 V (after approx. 30 s).

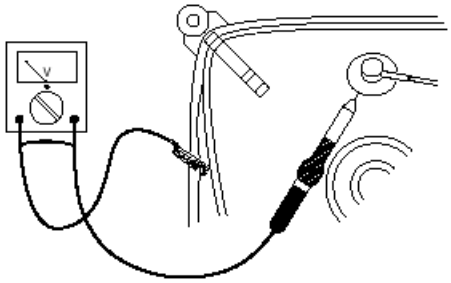

- All ICs and many other semiconductors are susceptible to electrostatic discharges (ESD). Careless handling during repair can reduce life drastically. When repairing, make sure that you are connected with the same potential as the mass of the set by a wristband with resistance. Keep components and tools also at this potential. Available ESD protection equipment:
  - Complete kit ESD3 (small tablemat, wristband, connection box, extension cable, and ground cable) 4822 310 10671.
  - Wristband tester 4822 344 13999.
- Together with the deflection unit and any multi-pole unit, flat square picture tubes form an integrated unit. The deflection and the multi-pole units are set optimally at the factory. Adjustment of this unit during repair is therefore not recommended.
- Be careful during measurements in the high voltage section and on the picture tube.
- Never replace modules or other components while the unit is switched ON.
- When you align the set, use plastic rather than metal tools. This will prevent any short circuits and the danger of a circuit becoming unstable.

Notes

- Measure the voltages and waveforms with regard to the chassis (= tuner) ground (⏚), or hot ground (⏚), depending on the area of circuitry being tested.
- The voltages and waveforms shown in the diagrams are indicative. Measure them in the Service Default Mode with a color bar signal and stereo sound (L: 3 kHz, R: 1 kHz unless stated otherwise) and picture carrier at 475.25 MHz (PAL) or 61.25 MHz (NTSC, channel 3).
- Where necessary, measure the waveforms and voltages with (⊓) and without (⊼) aerial signal. Measure the voltages in the power supply section both in normal operation (①) and in standby (⏻). These values are indicated

by means of the appropriate symbols.

- The picture tube panel has printed spark gaps. Each spark gap is connected between an electrode of the picture tube and the Aquadag coating.
- The semiconductors indicated in the circuit diagram and in the parts lists are completely interchangeable per position with the semiconductors in the unit, irrespective of the type indication on these semiconductors.

Abbreviation list

2CS	2 Carrier (or Channel) Stereo
ACI	Automatic Channel Installation: algorithm that installs TV sets directly from cable network by means of a predefined TXT page
ADC	Analogue to Digital Converter
AFC	Automatic Frequency Control: control signal used to tune to the correct frequency
AFT	Automatic Fine Tuning
AGC	Automatic Gain Control: algorithm that controls the video input of the featurebox
AM	Amplitude Modulation
AP	Asia Pacific
AR	Aspect Ratio: 4 by 3 or 16 by 9
ATS	Automatic Tuning System
AV	External Audio Video
AVL	Automatic Volume Level
BC-PROT	Beam Current Protection
BCL	Beam Current Limitation
B/G	Monochrome TV system. Sound carrier distance is 5.5 MHz
BLC-INFORMATION	Black current informationrmation
BTSC	Broadcast Television Standard Committee. Multiplex FM stereo sound system, originating from the USA and used e.g. in LATAM and AP-NTSC countries
B-TXT	Blue teletext
CC	Closed Caption
ComPair	Computer aided rePair
CRT	Cathode Ray Tube or picture tube
CSM	Customer Service Mode
CTI	Colour Transient Improvement: manipulates steepness of chroma transients
CVBS	Composite Video Blanking and Synchronisation
DAC	Digital to Analogue Converter
DBE	Dynamic Bass Enhancement: extra low frequency amplification
DBX	Dynamic Bass Expander
D/K	Monochrome TV system. Sound carrier distance is 6.5 MHz
DFU	Direction For Use: description for the end user
DNR	Dynamic Noise Reduction
DSP	Digital Signal Processing
DST	Dealer Service Tool: special remote control designed for dealers to enter e.g. service mode
DVD	Digital Versatile Disc
EEPROM	Electrically Erasable and Programmable Read Only Memory
EHT	Extra High Tension
EHT-	

INFORMATION	Extra High Tensioninformationrmation
EU	Europe
EW	East West, related to horizontal deflection of the set
EXT	External (source), entering the set via SCART or Cinch
FBL	Fast Blanking: DC signal accompanying RGB signals
FILAMENT	Filament of CRT
FLASH	Flash memory
FM	Field Memory
FM	Frequency Modulation
HA	Horizontal Acquisition: horizontal sync pulse coming out of the HIP
HFB	Horizontal Flyback Pulse: horizontal sync pulse from large signal deflection
HP	Headphone
Hue	Colour phase control for NTSC (not the same as 'Tint')
I	Monochrome TV system. Sound carrier distance is 6.0 MHz
I2C	Integrated IC bus
IF	Intermediate Frequency
IIC	Integrated IC bus
Interlaced	Scan mode where two fields are used to form one frame. Each field contains half the number of the total amount of lines. The fields are written in "pairs", causing line flicker.
ITV	Institutional TV
LATAM	Latin America
LED	Light Emitting Diode
L/L'	Monochrome TV system. Sound carrier distance is 6.5 MHz. L' is Band I, L is all bands except for Band I
LNA	Low Noise Amplifier
LS	Large Screen
LS	Loudspeaker
LSP	Large signal panel
M/N	Monochrome TV system. Sound carrier distance is 4.5 MHz
MSP	Multistandard Sound Processor: ITT sound decoder
MUTE	Mute-Line
NC	Not Connected
NICAM	Near Instantaneous Compounded Audio Multiplexing. This is a digital sound system, mainly used in Europe.
NTSC	National Television Standard Committee. Colour system mainly used in North America and Japan. Colour carrier NTSC M/N = 3.579545 MHz, NTSC 4.43 = 4.433619 MHz (this is a VCR norm, it is not transmitted off-air)
NVM	Non Volatile Memory: IC containing TV related data e.g. alignments
OB	Option Byte
OC	Open Circuit
OSD	On Screen Display
PAL	Phase Alternating Line. Colour system mainly used in West Europe (colour carrier = 4.433619 MHz) and South America (colour carrier PAL M = 3.575612 MHz and PAL N = 3.582056 MHz)
PCB	Printed Circuit board
PIP	Picture In Picture
PLL	Phase Locked Loop. Used for e.g. FST tuning systems. The customer can give directly the desired frequency
POR	Power-On Reset
Progressive Scan	Scan mode where all scan lines are displayed in one frame at the same time, creating a

	double vertical resolution.
PTP	Picture Tube Panel (or CRT-panel)
RAM	Random Access Memory
RC	Remote Control handset
RC5	Remote Control system 5, signal from the remote control receiver
RGB	Red Green Blue
ROM	Read Only Memory
SAM	Service Alignment Mode
SAP	Second Audio Program
SC	Sandcastle: pulse derived from sync signals
S/C	Short Circuit
SCAVEM	Scan Velocity Modulation
SCL	Serial Clock
SDA	Serial Data
SDM	Service Default Mode
SECAM	SEequence Couleur Avec Memoire. Colour system mainly used in France and East Europe. Colour carriers = 4.406250 MHz and 4.250000 MHz
SIF	Sound Intermediate Frequency
SS	Small Screen
STBY	Standby
SVHS	Super Video Home System
SW	Software
THD	Total Harmonic Distortion
TXT	Teletext
µP	Microprocessor
UOC	Ultimate One Chip
VA	Vertical Acquisition
VBAT	Main supply voltage for the deflection stage (mostly 141 V)
V-chip	Violence Chip
VCR	Video Cassette Recorder
WYSIWYR	What You See Is What You Record: record selection that follows main picture and sound
XTAL	Quartz crystal
YC	Luminance (Y) and Chrominance (C) signal

Schematic notes

Diversity tabel A1				
Item	Description	14"/19" DBX	19" Mono, Stereo Non-DBX	13"
1515	Relay 5A	X	X	
2505	2n2 1kV			X
2566	47U 25V	X		
2580	47U 25V	X	X	
3508	1M5	X	X	
3560	47R	X		
3567	2K2	X		
3568	8K2	X		
3580	47K	X	X	
6561	BYW76-RAS15/10	X	X	
6580	BAS316	X	X	
6581	BAS316	X	X	
7562	BC857B	X		
7564	BC857B	X		
7580	BC857B	X	X	
9503	Wire			X

"$"	FOR MAINS 120V AC 170V (177V) 220V AC 309V (317V)
..V.. (..V..)	Normal Operation Standy Mode
	HOT GROUND
	COLD GROUND

Items marked with a *, but not mentioned in the diversity table have no diversity in this product.

Schematic notes

Diversity tabel A2					
Item	Description	14" Real flat	19" CRT A48EJP03X110/A48JLL40X46(M)	13"	19" CRT A48KRD89X04
2402	560N 250V		X	X	X
2404	360N 250V	X			
2416	470P	X	X	X	
5403	33U			X	X
5406	COI LINCOR DRUM	X			
9403	Wire	X	X		
9404	Wire		X	X	X

Items marked with a *, but not mentioned in the diversity table have no diversity in this product.

$ K + Schematic notes

AP / CH	14"	17"	20"	21"	21" CHINA
3471 3472	5R6 5R6	3R3 3R3	3R3 5R6	3R3 3R3	3R3 3R9

LATAM	14"	20"	21"
3471 3472	6R8 3R9	3R9 3R9	3R3 3R3

NAFTA	13V	19V
3471 3472	6R8 3R3	3R9 3R9

Items marked with a *, but not mentioned in the diversity table have no diversity in this product.

Schematic notes

Diversity tabel A5					
Item	Description	14" Real flat	19" DBX	13"/19" Mono	19" Stereo Non-DBX
2202	100N 25V	X	X	X	X
2220	470N 50V		X		
2221	22N 50V	X	X		
2226	100P 50V			X	X
2227	4N7 50V			X	X
2228	820P 50V			X	X
2229	10U 50V			X	X
3220	100R		X		
3221	560R		X		
3222	100R		X		
3232	2K2			X	X
4209	Jumper	X	X		
4212	Jumper			X	
4214	Jumper				X
7205	BC857B		X		
9618	Wire	X	X		

Items marked with a *, but not mentioned in the diversity table have no diversity in this product.

Schematic notes

Diversity table A6					
		Non-DBX		DBX	
Item	Description	25" Mono	25" Stereo	25" + 27" + 32" + 36"	20" Real flat
2246	4U7 50V	X			
2254	100P 50V				X
2254	Jumper	X	X	X	

Items marked with a *, but not mentioned in the diversity table have no diversity in this product.

Schematic notes

Diversity tabel A7				
Item	Description	19" Stereo Non-DBX	14"/19" DBX	13"/19" Mono
3601	8K2		X	
3609	1K		X	
3610	8K2		X	
3614	4K7			X
3615	10K			X
3617	4K7			X
3619	8K2			X
3635	100R		X	
3635	100R			
9692	Wire			X

Items marked with a *, but not mentioned in the diversity table have no diversity in this product.

Schematic notes

Diversity tabel A8				
Item	Description	14"/19" DBX, 19" Non-DBX Front I/O	19" Non-DBX, No Front I/O	13"/19" Mono
0246	Con 3P M			X
0246	Con 5P M	X	X	
2906	470N 16V	X	X	
2907	1N 50V	X	X	
2941	1U 50V			X
2942	33N 50V			X
2943	100N 16V			X
2944	47N 50V			X
2945	10N 50V			X
2946	1U 16V			X
3905	15K	X	X	
3906	10K	X	X	
3941	100R			X
3942	3K9			X
3943	2K7			X
3944	2K7			X
3945	1K			X
3946	18K			X
3947	330R			X
3948	47K			X
3949	15K			X
3950	560R			X
3951	390R			X
4903	Jumper	X	X	
7901	AN7522N	X	X	
7902	AN7523N			X
7941	BC847B			X
7942	BC847B			X
7943	BC847B			X
9901	Wire		X	
9902	Wire		X	
9913	Wire	X	X	
9914	Wire	X	X	

Items marked with a *, but not mentioned in the diversity table have no diversity in this product.

Schematic notes

Diversity tabel A9					
Item	Description	14" Real flat	19" DBX	19" Stereo Non-DBX, Front I/O	13"/19" Mono
1831	XTL 18MHZ432	X	X		
2831	1P 50V	X	X		
2832	1P 50V	X	X		
2833	47P 50V	X	X		
2834	470P 50V	X	X		
2835	220P 50V	X	X		
2836	1N5 50V	X	X		
2837	4U7 50V	X	X		
2838	47P 50V	X	X		
2839	47P 50V	X	X		
2840	100N 25V	X	X		
2841	10U 50V	X	X		
2842	100N 25V	X	X		
2843	10U 50V	X	X		
2844	10U 50V	X	X		
2845	100N 25V	X	X		
2846	100U 25V	X	X		
2849	1N 50V	X	X		
2850	1N 50V	X	X		
2851	4U7 10V	X	X		
2852	1N 50V	X	X		
2853	4U7 10V	X	X		
2854	1N 50V	X	X		
2855	33P 50V	X	X		
2856	47P 50V	X	X		
2857	150P 50V	X	X		
2860	180P 50V	X	X		
2894	220P 50V	X	X		
2895	560P 50V	X	X		
2897	390P 50V	X	X		
2898	10N 50V	X	X		
3831	47K	X	X		
3832	100R	X	X		
3833	100R	X	X		
3836	1K	X			
3836	1K		X		
3837	100R	X			
3837	100R		X		
3838	1K	X	X		
3839	100R	X	X		
3843	2K2	X	X		
4831	Jumper	X	X		
4833	Jumper	X	X		
4835	Jumper	X	X		
5831	6U8	X	X		
5832	6U8	X	X		
5833	6U8	X	X		
5833	Wire				X
5835	12U	X	X		
6831	1N4148	X	X		
7831	MSP3445G	X	X		

Items marked with a *, but not mentioned in the diversity table have no diversity in this product.

Schematic notes

Diversity tabel A10					
Item	Description	14" Real flat	19" DBX	19" Stereo	13"/19" Mono
2801	22U	X			
2801	22U		X		
2802	220N 25V	X			
2802	220N 25V		X		
2803	2U2 10V	X	X		
2804	4U7 10V	X	X		
2805	4U7 10V	X	X		
3801	220R	X	X		
3802	1K	X	X		
3803	100K	X	X		
3804	82K	X	X		
3805	1K	X	X		
3806	100K	X	X		
3807	82K	X	X		
3808	1K	X	X		
4802	Jumper	X	X		
4804	Jumper	X	X		
4807	Jumper				X
7801	HEF4052BT	X	X		
7802	HEF4053BT	X	X		
7803	BC847B	X	X		
7804	BC847B	X	X		

EU	Output			HEF Logic	
	Scart1	Scart2	Monitor	SEL-MAIN-FRNT-RR	SC2_CTRL
Front In	RF Mode	Front Mode	Front Mode	0	0
Scart 1 in	RF Mode	Scart1 Mode	Scart1 Mode	0	1
Scart 2 in	RF Mode	RF Mode	Scart2 Mode	1	0
R.F In	RF Mode	RF Mode	RF Mode	1	1

Items marked with a *, but not mentioned in the diversity table have no diversity in this product.

Schematic notes

Diversity tabel A11						
Item	Description	14" Real flat	13"/19" Mono	19" DBX	19" Non-DBX, Front I/O	19" Non-DBX, No front I/O
1861	Res 514.5kHz				X	X
2861	220N 25V				X	X
2862	2U2 10V				X	X
2864	2U2 50V				X	X
2865	2U2 50V				X	X
2866	2U2 10V				X	X
2867	3N3 10V				X	X
2868	150P 50V				X	X
2869	47N				X	X
2870	47N				X	X
2871	150P 50V				X	X
2872	3N3				X	X
2873	2U2 10V				X	X
2874	100U 25V				X	X
2875	100U 25V				X	X
2876	4U7 50V				X	X
2877	10U 50V				X	X
2878	1U 50V				X	X
2879	4N7 50V				X	X
2880	22N 50V				X	X
2883	470U 16V				X	X
2884	2U2 50V				X	X
2885	220N 50V				X	X
2886	220N 25V				X	X
2891	2U2 10V				X	
3861	100K				X	X
3862	15K				X	X
3863	1K2				X	X
3864	100R				X	X
3865	100R				X	X
3866	100R				X	X
3867	3K3				X	X
5861	10U				X	X
7861	TDA9853H/V1				X	X
9890	Wire				X	X
9894	Wire				X	

Items marked with a *, but not mentioned in the diversity table have no diversity in this product.

Schematic notes

Diversity tabel A12						
Item	Description	14" Real flat	19" Non-DBX, Front I/O	19" DBX	19" Non-DBX, No front I/O	13"/19" Mono
0218	Soc cinch 2P F					X
0218	Soc cinch 3P F		X	X		
0218	Soc cinch 3P F	X				
0232	Soc phone 1P F	X	X	X		X
2181	22P 50V	X	X	X		X
2182	330P 50V	X	X	X		X
2183	330P 50V	X	X	X		
2981	100U 25V	X	X	X		X
2982	470P 50V	X	X	X		X
2983	100U 25V	X	X	X		X
2984	470P 50V	X	X	X		X
3181	75R	X	X	X		X
3182	100R	X	X	X		X
3183	150R	X	X	X		X
3184	47K	X	X	X		X
3185	150R	X	X	X		
3186	47K	X	X	X		
3981	120R	X	X	X		X
3982	120R	X	X	X		X
9181	Wire	X	X	X		X
9982	Wire					X

ITEM	PAINTER LEADER	PAINTER PLUS
3681	470 ohm	270 ohm
3682	3.9k ohm	3.3k ohm
3683	270 ohm	390 ohm
3684	470 ohm	560 ohm
3685	560 ohm	560 ohm
3686	1.8k ohm	1.5k ohm

Items marked with a *, but not mentioned in the diversity table have no diversity in this product.

Schematic notes

Diversity tabel A13			
Item	Description	14" Real flat	19" DBX
0223	Cinch 6P F		X
0223	Cinch 3P F	X	
0225	M-DIN 4P F	X	X
2101	470N 16V		X
2102	22P 50V		X
2103	330P 50V	X	X
2104	330P 50V		X
2105	10U 50V		X
2106	10U 50V		X
2122	330P 50V	X	X
2123	2U2 10V	X	X
2124	330P 50V	X	X
2125	2U2 10V	X	X
2135	22P 50V	X	X
2136	22P 50V	X	X
2141	330P 50V	X	X
3101	68R		X
3102	1K		X
3103	150R		X
3104	220K		X
3105	150R		X
3106	220K		X
3123	150R	X	X
3124	47K	X	X
3125	150R	X	X
3126	47K	X	X
3135	75R	X	X
3136	100R	X	X
3137	75R	X	X
3138	100R	X	X
3141	1K	X	X
4101	Jumper		X
4102	Jumper		X
4104	Jumper		X
4121	Jumper	X	X
7101	BC847B		X
9121	Wire	X	X
9122	Wire	X	X

Items marked with a *, but not mentioned in the diversity table have no diversity in this product.

Schematic notes

NAFTA	13V	19V
3349	2R2	1R0
3350	2R2	1R0
5341	spt0508 12u	fxdind 3u3

AP / CH	14"	17"	20"	21"	21" CHINA
3349	2R2	3K9	1R2	1R2	1R2
3350	2R2	1R0	1R2	1R2	1R2
5341	spt0508 27u	spt0508 12u	spt0508 2u2	fxdind 1u5	spt0508 27u

LATAM	14"	20"	21"
3349	1R8	1R2	1R8
3350	1R8	1R2	1R8
5341	spt0508 12u	fxdind 22u	spt0508 56u

Europe	14"	17"	20"	21"
3349	1R5	2R7	1R0	1R5
3350	1R5	3R3	1R0	1R5
5341	spt0508 15u	spt0508 12u	spt0508 10u	spt0508 22u

Items marked with a *, but not mentioned in the diversity table have no diversity in this product.

Schematic notes

# For 25" and above	
0251	For Chassis with Rear Scart
0252	For Chassis with Rear Scart
0261	For Chassis with Rear Cinch
6161	BZX79-C6V8

* For 21" and below	
3150	47K
3151	1K
3152	47K
3153	1K
9152	For mono set w/out front cinch
9153	For stereo set w/out front cinch

Items marked with a *, but not mentioned in the diversity table have no diversity in this product.

Philips Consumer Electronics

Technical Service Data

Service and Quality
Service Publications Dept.
One Philips Drive
P.O. Box 14810
Knoxville, TN 37914

Manual 7602
Model no.: 20LX200125
First Publish: 5-10-2001
Rev. Date: 10-16-2002
Print Date: 06/04/2007

Electrical Adjustments

REFER TO SAFETY GUIDELINES

SAFETY NOTICE: ANY PERSON ATTEMPTING TO SERVICE THIS CHASSIS MUST FAMILIARIZE HIMSELF WITH THE CHASSIS AND BE AWARE OF THE NECESSARY SAFETY PRECAUTIONS TO BE USED WHEN SERVICING ELECTRONIC EQUIPMENT CONTAINING HIGH VOLTAGES.

CAUTION: USE A SEPARATE ISOLATION TRANSFORMER FOR THIS UNIT WHEN SERVICING

© Philips Electronics North America Corporation
Visit our World Wide Web Site at http://www.forceonline.com

Alignments

Note: The Service Default Mode (SDM) and Service Alignment Mode (SAM) are described in ***Service Modes Error Codes And Fault Finding***. Menu navigation is done with the 'CURSOR UP, DOWN, LEFT or RIGHT' keys of the remote control transmitter.

General Alignment Conditions

Perform all electrical adjustments under the following conditions:

- AC voltage and frequency: 110 V (± 10 %), 60 Hz (± 5 %).
- Connect the set to the AC power via an isolation transformer.
- Allow the set to warm up for approximately 20 minutes.
- Measure the voltages and waveforms in relation to chassis ground (with the exception of the voltages on the primary side of the power supply). Never use the cooling fins / plates as ground.
- Test probe: Ri > 10 MΩ; Ci < 2.5 pF.
- Use an isolated trimmer / screwdriver to perform the alignments.

Hardware Alignments

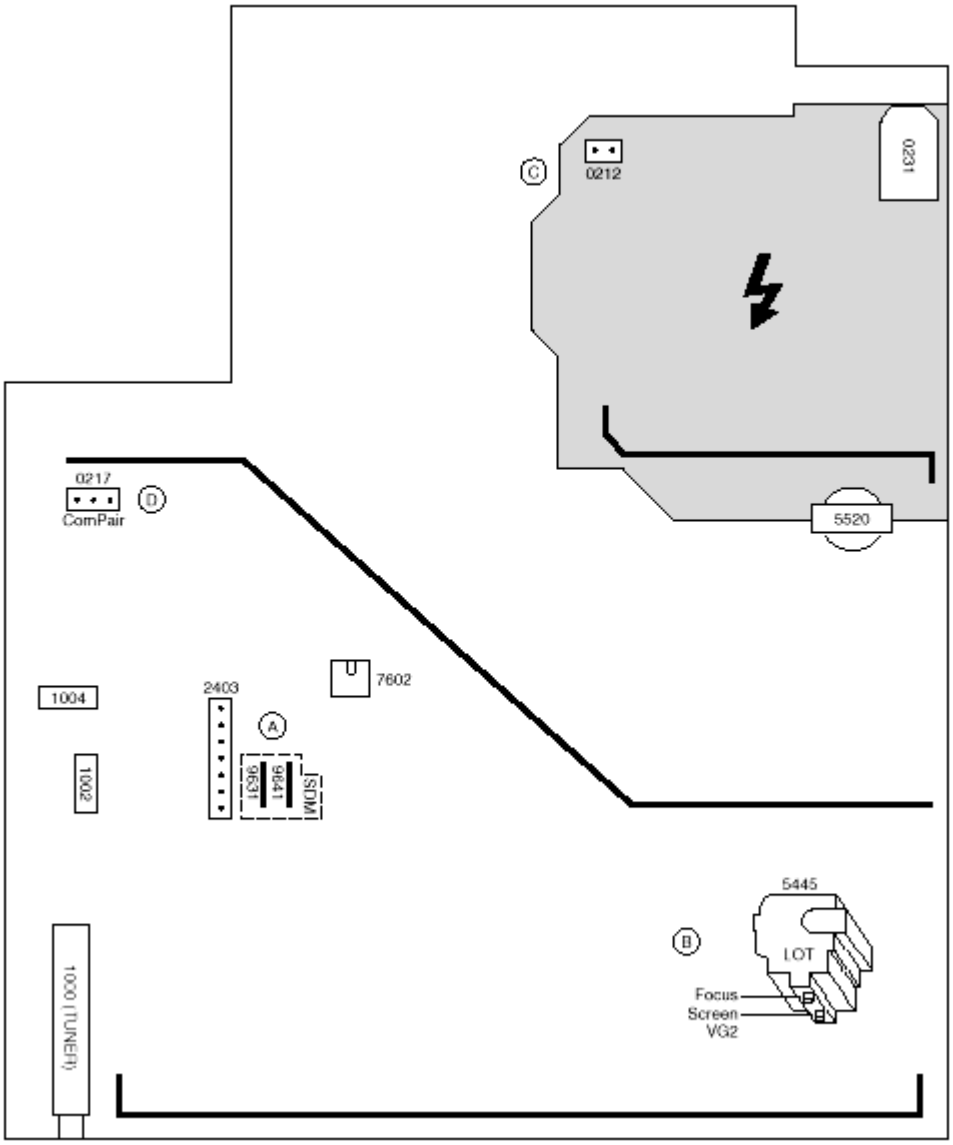

Fig. 1

Vg2 Adjustment

1. Activate the SAM.
2. Go to the WHITE TONE sub menu.
3. Set the values of NORMAL RED, GREEN and BLUE to 40.
4. Go, via the MENU key, to the normal user menu and set
   - CONTRAST to zero.
   - BRIGHTNESS to minimum (OSD just visible in a dark room).
5. Return to the SAM via the MENU key.
6. Connect the RF output of a pattern generator to the antenna input. Test pattern is a 'black' picture (blank screen on CRT without any OSD info).

7. Set the channel of the oscilloscope to 50 V/div and the time base to 0.2 ms (external triggering on the vertical pulse).
8. Ground the scope at the CRT panel and connect a 10:1 probe to one of the cathodes of the picture tube socket (see diagram B).
9. Measure the cut off pulse during first full line after the frame blanking (see Fig. 2). You will see two pulses, one being the cut off pulse and the other being the white drive pulse. Choose the one with the lowest value, this is the cut off pulse.
10. Select the cathode with the highest V_{DC} value for the alignment. Adjust the V_{cutoff} of this gun with the SCREEN potentiometer (see Fig. 1) on the LOT to the correct value (see table below).
11. Restore BRIGHTNESS and CONTRAST to normal (= 31).

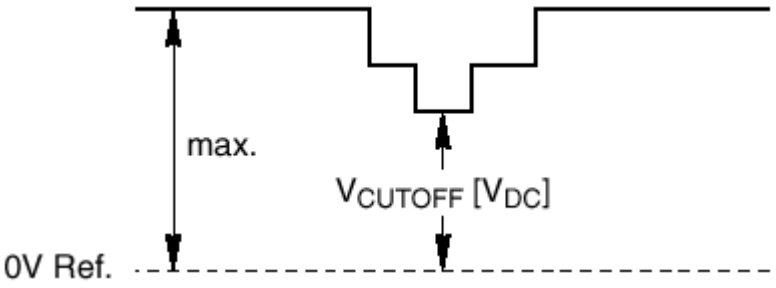

Fig. 2

Screen size	Cut-off [V]
13V, 14", 14RF, 15RF, 17", 19V, 20"	140 ± 4
21" (L8)	150 ± 4
21" (M8), 20RF, 21RF, 24WS, 25BLD, 25HF, 28 BLD, 28WS	125 ± 4
25V, 25BLS, 25RF, 27V, 28BLS, 29", 29RF, 32V, 33", 32WS, 35V	145 ± 10

Focusing

1. Tune the set to a circle or crosshatch test pattern (use an external video pattern generator).
2. Choose picture mode NATURAL (or MOVIES) with the 'SMART PICTURE' button on the remote control transmitter.
3. Adjust the FOCUS potentiometer (see Fig.1) until the vertical lines at 2/3 from east and west, at the height of the centerline, are of minimum width without visible haze.

Software Alignments And Settings

Enter the Service Alignment Mode (see ***Service Modes Error Codes And Fault Finding***.). The SAM menu will now appear on the screen.

Options

Display Option Byte Table

Options are used to control the presence / absence of certain features and hardware.

How to change an Option Byte

An Option Byte represents a number of different options.
Changing these bytes directly makes it possible to set all options very fast. All options are controlled via seven option bytes. Select the option byte (OB1.. OB7) with the MENU UP/DOWN keys, and enter the new value.
Leaving the OPTION submenu saves changes in the Option Byte settings. Some changes will only take effect after the set has been switched OFF and ON with the AC power switch (cold start).

How to calculate the value of an Option Byte

Calculate an Option Byte value (OB1 .. OB7) in the following way:

1. Check the status of the single option bits (OP): are they enabled (1) or disabled (0).
2. When an option bit is enabled (1) it represents a certain value (see column 'Dec. value' in table below). When an option bit is disabled, its value is 0.
3. The total value of an Option Byte is formed by the sum of its eight option bits.

OPTION BYTE STRUCTURE									
Bit	7	6	5	4	3	2	1	0	TOTAL VALUE
Dec. value	128	64	32	16	8	4	2	1	
OB1	OP17	OP16	OP15	OP14	OP13	OP12	OP11	OP10	Sum (OP10 to OP17)
OB2	OP27	OP26	OP25	OP24	OP23	OP22	OP21	OP20	Sum (OP20 to OP27)
OB3	OP37	OP36	OP35	OP34	OP33	OP32	OP31	OP30	Sum (OP30 to OP37)
OB4	OP47	OP46	OP45	OP44	OP43	OP42	OP41	OP40	Sum (OP40 to OP47)
OB5	OP57	OP56	OP55	OP54	OP53	OP52	OP51	OP50	Sum (OP50 to OP57)
OB6	OP67	OP66	OP65	OP64	OP63	OP62	OP61	OP60	Sum (OP60 to OP67)
OB7	OP77	OP76	OP75	OP74	OP73	OP72	OP71	OP70	Sum (OP70 to OP77)

Option Bit Assignment

Following are the option bit assignments for all L01 software clusters.

- Option Byte 1 (OB1)
  - OP10: CHINA
  - OP11: VIRGIN_MODE

- OP12: UK_PNP
- OP13: ACI
- OP14: ATS
- OP15: LNA
- OP16: FM_RADIO
- OP17: PHILIPS_TUNER

• Option Byte 2 (OB2)

- OP20: HUE
- OP21: COLOR_TEMP
- OP22: CONTRAST_PLUS
- OP23: TILT
- OP24: NOISE_REDUCTION
- OP25: CHANNEL_NAMING
- OP26: SMART_PICTURE
- OP27: SMART_SOUND

• Option Byte 3 (OB3)

- OP30: AVL
- OP31: WSSB
- OP32: WIDE_SCREEN
- OP33: SHIFT_HEADER_SUBTITLE
- OP34: CONTINUOUS_ZOOM
- OP35: COMPRESS_16_9
- OP36: EXPAND_4_3
- OP37: EW_FUNCTION

• Option Byte 4 (OB4)

- OP40: STEREO_NON_DBX
- OP41: STEREO_DBX
- OP42: STEREO_PB
- OP43: STEREO_NICAM_2CS
- OP44: DELTA_VOLUME
- OP45: ULTRA_BASS
- OP46: VOLUME_LIMITER
- OP47: INCR_SUR

• Option Byte 5 (OB5)

- OP50: PIP
- OP51: HOTEL_MODE
- OP52: SVHS
- OP53: CVI
- OP54: AV3
- OP55: AV2
- OP56: AV1
- OP57: NTSC_PLAYBACK

• Option Byte 6 (OB6)

- OP60: Reserved (value = 0)
- OP61: SMART_TEXT
- OP62: SMART_LOCK
- OP63: VCHIP
- OP64: WAKEUP_CLOCK
- OP65: SMART_CLOCK

- OP66: SMART_SURF
- OP67: PERSONAL_ZAPPING
- Option Byte 7 (OB7)
- OP70: SOUND_SYSTEM_AP_3 /MULTI_STANDARD_EUR / SYSTEM_LT_2
- OP71: SOUND_SYSTEM_AP_2 / WEST_EU/ SYSTEM_LT_1
- OP72: SOUND_SYSTEM_AP_1
- OP73: COLOR_SYSTEM_AP
- OP74: Reserved (value = 0)
- OP75: Reserved (value = 0)
- OP76: TIME_WIN2
- OP77: TIME_WIN1

Option bit definition

- OP10: CHINA
  0 : Tuning is not for China set, or this option bit is not applicable,
  1 : Tuning is for China set,
  Default setting : 0.
- OP11: VIRGIN_MODE 0 :
  Virgin mode is disabled or not applicable,
  1 : Virgin mode is enabled. Plug and Play menu item will be displayed to perform installation at the initial startup of the TV when VIRGIN_MODE is set to 1. After installation is finished, this option bit will be automatically set to 0,
  Default setting : 0.
- OP12: UK_PNP
  0 : UK's default Plug and Play setting is not available or not applicable, 1 : UK's default Plug and Play setting is available. When UK_PNP and VIRGIN_MODE are set to 1 at the initial setup, LANGUAGE = ENGLISH, COUNTRY = GREAT BRITAIN and after exiting from menu, VIRGIN_MODE will be set automatically to 0 while UK_PNP remains 1,
  Default setting : 0.
- OP13: ACI
  0 : ACI feature is disabled or not applicable,
  1 : ACI feature is enabled,
  Default setting : 0.
- OP14: ATS
  0 : ATS feature is disabled or not applicable, 1 : ATS feature is enabled. When ATS is enabled, it sorts the program in an ascending order starting from program 1,
  Default setting : 0.
- OP15: LNA
  0 :Auto Picture Booster is not available or not applicable,
  1: Auto Picture Booster is available,
  Default setting : 0.
- OP16: FM_RADIO
  0 : FM radio feature is disabled or not applicable,
  1 : FM radio feature is enabled,
  Default setting : 0.
- OP17: PHILIPS_TUNER
  0 : ALPS / MASCO compatible tuner is in use,
  1 : Philips compatible tuner is in use,
  Default setting : 0.
- OP20: HUE

0 : Hue/Tint Level is disabled or not applicable,
1 : Hue/Tint Level is enabled,
Default setting : 0.

- OP21: COLOR_TEMP
  0 : Color Temperature is disabled or not applicable,
  1 : Color Temperature is enabled,
  Default setting : 0.
- OP22: CONTRAST_PLUS
  0 : Contrast+ is disabled or not applicable,
  1 : Contrast+ is enabled,
  Default setting : 0.
- OP23: TILT
  0 : Rotate Picture is disabled or not applicable,
  1 : Rotate Picture is enabled,
  Default setting : 0.
- OP24: NOISE_REDUCTION
  0 : Noise Reduction (NR) is disabled or not applicable,
  1 : Noise Reduction (NR) is enabled,
  Default setting : 0.
- OP25: CHANNEL_NAMING
  0 : Name FM Channel is disabled or not applicable,
  1 : Name FM Channel is enabled,
  Default setting : 0.
  Note : Name FM channel can be enabled only when FM_RADIO = 1.
- OP26: SMART_PICTURE
  0 : Smart Picture is disabled or not applicable,
  1 : Smart Picture is enabled,
  Default setting : 1
- OP27: SMART_SOUND
  0 : Smart Sound is disabled or not applicable,
  1 : Smart Sound is enabled,
  Default setting : 1
- AP30: AVL
  0 : AVL is disabled or not applicable,
  1 : AVL is enabled,
  Default setting : 0.
- OP31: WSSB
  0 : WSSB is disabled or not applicable,
  1 : WSSB is enabled,
  Default setting : 0.
  Note : This option bit can be set to 1 only when WIDE_SCREEN = 1.
- OP32: WIDE_SCREEN
  0 : Software is used for 4:3 set or not applicable,
  1 : Software is used for 16:9 set,
  Default setting : 0.
- OP33: SHIFT_HEADER_SUBTITLE
  0 : Shift Header / Subtitle is disabled or not applicable,
  1 : Shift Header / Subtitle is enabled,
  Default setting : 0.
  Note : This option bit can be set to 1 only when WIDE_SCREEN = 1.

- OP34: CONTINUOUS_ZOOM
  0 : Continuous Zoom is disabled or not applicable,
  1 : Continuous Zoom is enabled,
  Default setting : 0.
  Note : This option bit can be set to 1 only when WIDE_SCREEN = 1.
- OP35: COMPRESS_16_9
  0 : COMPRESS 16:9 selection is not applicable. Item should not be in the FORMAT menu list,
  1 : COMPRESS 16:9 selection is applicable. Item should not be in the FORMAT menu list,
  Default setting : 0.
- OP36: EXPAND_4_3
  0 : Expand 4:3 selection is not applicable. Item should not be in the FORMAT menu list,
  1 : Expand 4:3 selection is applicable. Item should be in the FORMAT menu list,
  Default setting : 0.
- OP37: EW_FUNCTION
  0 : EW function is disabled. In this case, only Expand 4:3 is allowed, Compress 16:9 is not applicable.
  1 : EW function is enabled. In this case, both Expand 4:3 and Compress 16:9 are applicable.
  Default setting : 0.
- OP40: STEREO_NON_DBX
  0 : For AP_NTSC, chip TDA 9853 is not present,
  1 : For AP_NTSC, chip TDA 9853 is present,
  Default setting : 0.
- OP41: STEREO_DBX
  0 : For AP_NTSC, chip MSP 3445 is not present,
  1 : For AP_NTSC, chip MSP 3445 is present, Default setting : 0.
- OP42: STEREO_PB
  0 : For AP_PAL, chip MSP3465 is not present,
  1 : For AP_PAL, chip MSP3465 is present,
  Default setting : 0.
- OP43: STEREO_NICAM_2CS
  0 : For EU and AP_PAL, chip MSP 3415 is not present,
  1 : For EU and AP_PAL, chip MSP 3415 is present,
  Default setting : 0.
- OP44: DELTA_VOLUME
  0 : Delta Volume Level is disabled or not applicable,
  1 : Delta Volume Level is enabled,
  Default setting : 0.
- OP45: ULTRA_BASS
  0 : Ultra Bass is disabled or not applicable,
  1 : Ultra Bass is enabled,
  Default setting : 0.
- OP46: VOLUME_LIMITER
  0 : Volume Limiter Level is disabled or not applicable,
  1 : Volume Limiter Level is enabled,
  Default setting : 0.
- OP47: INCR_SUR
  0 : Incredible Surround feature is disabled,
  1 : Incredible Surround feature is enabled,
  Default setting : 1
- OP50: PIP
  0 : PIP is disabled or not applicable,

1 : PIP is enabled,
Default setting : 0.

- OP51: HOTEL_MODE
  0 : Hotel mode is disabled or not applicable,
  1 : Hotel mode is enabled,
  Default setting : 0.
- OP52: SVHS
  0 : SVHS source is not available,
  1 : SVHS source is available,
  Default setting : 0.
  Note : This option bit is not applicable for EU.
- OP53: CVI
  0 : CVI source is not available,
  1 : CVI source is available,
  Default setting : 0.
- OP54: AV3
  0 : Side/Front AV3 source is not present,
  1 : Side/Front AV3 source is present,
  Default setting : 0.
- OP55: AV2
  0 : AV2 source is not present,
  1 : AV2 source is present,
  Default setting : 0.
  Note : For EU, when AV2=1, both EXT2 and SVHS2 should be included in the OSD loop.
- OP56: AV1
  0 : AV1 source is not present,
  1 : AV1 source is present,
  Default setting : 0.
- OP57: NTSC_PLAYBACK
  0 : NTSC playback feature is not available,
  1 : NTSC playback feature is available,
  Default setting : 0.
- OP60: Reserved
  Default setting : 0.
- OP61: SMART_TEXT
  0 : Smart Text Mode and Favorite Page are disabled or not applicable,
  1 : Smart Text Mode and Favorite Page are enabled,
  Default setting : 1.
- OP62: SMART_LOCK
  0 : Child Lock and Lock Channel are disabled or not applicable for EU,
  1 : Child Lock and Lock Channel are enabled for EU,
  Default setting : 1.
- OP63: VCHIP
  0 : VCHIP feature is disabled,
  1 : VCHIP feature is enabled,
  Default setting : 1.
- OP64: WAKEUP_CLOCK
  0 : Wake up clock feature is disabled or not applicable,
  1 : Wake up clock feature is enabled,
  Default setting : 1.

- OP65: SMART_CLOCK
  0 : Smart Clock Using Teletext and Smart Clock Using PBS is disabled or not applicable,
  1 : Smart Clock Using Teletext and Smart Clock Using PBS is enabled. For NAFTA, menu item AUTOCHRON is present in the INSTALL submenu,
  Default setting : 0.
- OP66: SMART_SURF
  0 : Smart Surf feature is disabled or not applicable,
  1 : Smart Surf feature is enabled,
  Default setting : 0.
- OP67: PERSONAL_ZAPPING
  0 : Personal Zapping feature is disabled or not applicable,
  1 : Personal Zapping feature is enabled,
  Default setting : 0.
- OP70: MULTI_STANDARD_EUR
  0 : Not for Europe multi standard set, or this option bit is not applicable,
  1 : For Europe multi standard set.
  Default setting : 0.
  Note : This option bit is used to control the SYSTEM selection in Manual Store : If MULTI_STANDARD_EUR = 1 then SYSTEM = Europe, West Europe, East Europe, UK, France otherwise SYSTEM = 'Europe, West Europe, UK for West Europe' (WEST_EU=1) or SYSTEM = 'Europe, West Europe, East Europe for East Europe' (WEST_EU=0)
- OP71: WEST_EU
  0 : For East Europe set, or this option bit is not applicable,
  1 : For West Europe set,
  Default setting : 0.
- OP71 and 70: SYSTEM_LT_1, SYSTEM_LT_2
  These two option bits are allocated for LATAM system selection.
  00 : NTSC-M
  01 : NTSC-M, PAL-M
  10 : NTSC-M, PAL-M, PAL-N
  11 : NTSC-M, PAL-M, PAL-N, PAL-BG
  Default setting : 00
- OP70, 71 and 72: SOUND_SYSTEM_AP_1, SOUND_SYSTEM_AP_2, SOUND_SYSTEM_AP_3
  These three option bits are allocated for AP_PAL sound system selection.
  000 : BG
  001 : BG / DK
  010 : I / DK
  011 : BG / I / DK
  100 : BG / I / DK / M
  Default setting : 00
- OP73: COLOR_SYSTEM_AP
  This option bit is allocated for AP-PAL color system selection.
  0 : Auto, PAL 4.43, NTSC 4.43, NTSC 3.58
  1 : Auto, PAL 4.43, NTSC 4.43, NTSC 3.58, SECAM
  Default setting : 0
- OP74: Reserved
  Default setting : 0.
- OP75: Reserved
  Default setting : 0.

- OP77 and 76: TIME_WIN1, TIME_WIN2
  00 :The time window is set to 1.2s
  01 : The time window is set to 2s
  10 : The time window is set to 5s
  11 : not in use
  Default setting : 01
  Note :The time-out for all digit entries depend on this setting.

Tuner

Note: Described alignments are only necessary when the NVM (item 7602) is replaced.

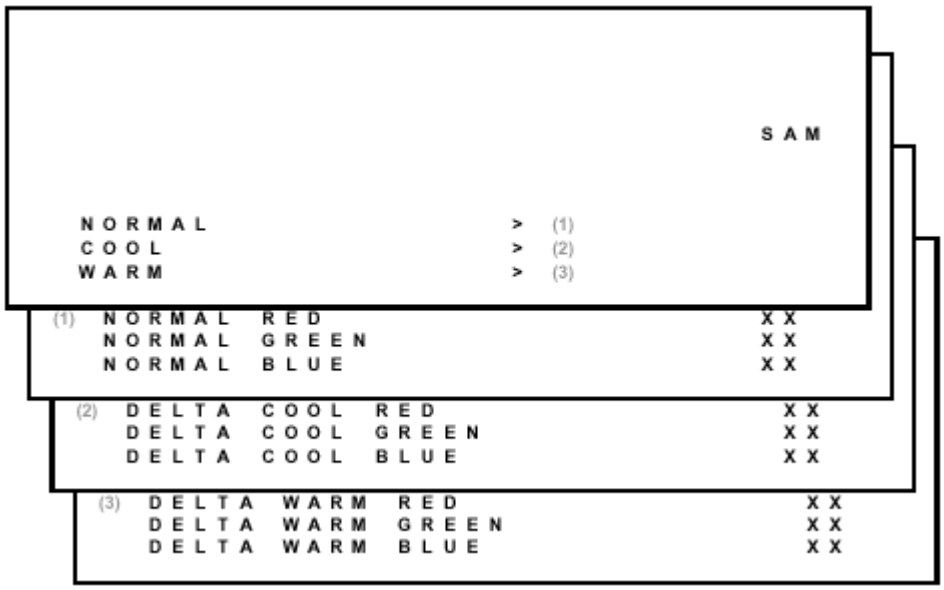

IF PLL

This adjustment is auto-aligned. Therefore, no action is required.

AFW (AFC window)

Fixed value is OFF.

AGC (AGC take over point)

Set the external pattern generator to a color bar video signal and connect the RF output to aerial input. Set amplitude to 10 mV and set frequency to 61.25 MHz (channel 3).
Connect a DC multimeter to pin 1 of the tuner (item 1000 on the main panel).

1. Activate the SAM.
2. Go to the TUNER sub menu.
3. Select AFW with the UP/DOWN cursor keys and set to ON.
4. Select AGC with the UP/DOWN cursor keys.
5. Adjust the AGC-value (default value is 27) with the LEFT/RIGHT cursor keys until the voltage at pin 1 of the tuner

lies between 3.8 and 2.3 V.

6. Select AFW with the UP/DOWN cursor keys and set to OFF.
7. Switch the set to STANDBY.

YD (Y-delay adjustment)

Always set to 3.

CL (Cathode drive level)

Always set to 4.

AFA

Read only bit, for monitoring purpose only.

AFB

Read only bit, for monitoring purpose only.

White Tone

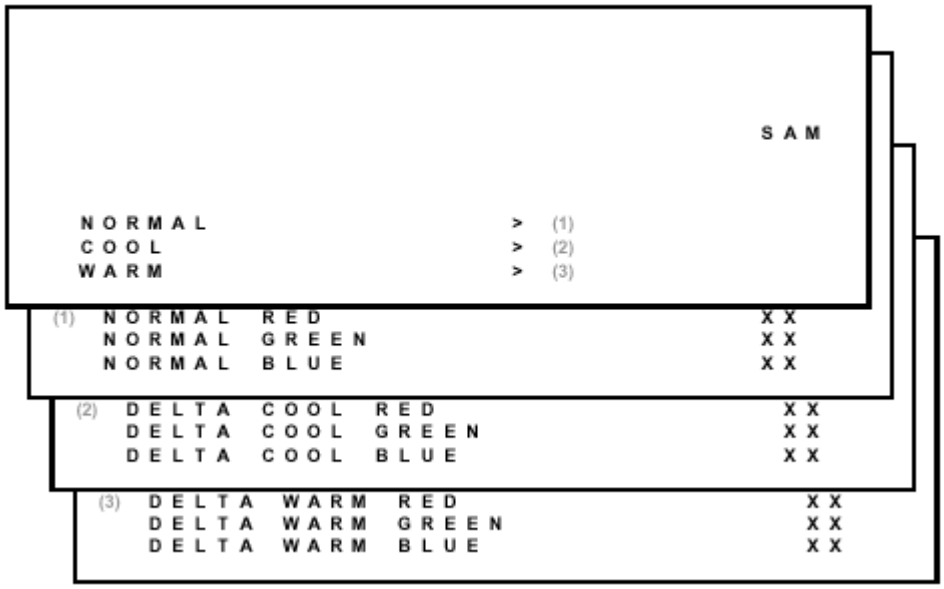

In the WHITE TONE sub menu, the values of the black cut off level can be adjusted. Normally, no alignment is needed for the WHITE TONE. You can use the given default values.
The color temperature mode (NORMAL, COOL and WARM) and the color (R, G, and B) can be selected with the UP/DOWN RIGHT/LEFT cursor keys. The value can be changed with the LEFT/RIGHT cursor keys. First, select the values for the NORMAL color temperature. Then select the values for the COOL and WARM mode. After alignment, switch the set to standby, in order to store the alignments.
Default settings:

1. **NORMAL** (color temperature = 10500 K):

– NORMAL R = 40
– NORMAL G = 40
– NORMAL B = 40

2. **COOL** (color temperature = 14000 K):
– DELTA COOL R = -2
– DELTA COOL G = 0
– DELTA COOL B = 6
3. **WARM** (color temperature = 8200 K):
– DELTA WARM R = 2
– DELTA WARM G = 0
– DELTA WARM B = -7

Geometry

The geometry alignments menu contains several items to align the set, in order to obtain a correct picture geometry.

Connect an external video pattern generator to the aerial input of the TV-set and input a crosshatch test pattern. Set the generator amplitude to at least 1 mV and set frequency to 61.25 MHz (channel 3).
1. Set 'Smart Picture' to NATURAL (or MOVIES).
2. Activate the SAM menu (see chapter 5).
3. Go to the GEOMETRY sub menu.
4. Choose HORIZONTAL or VERTICAL alignment

Now the following alignments can be performed:

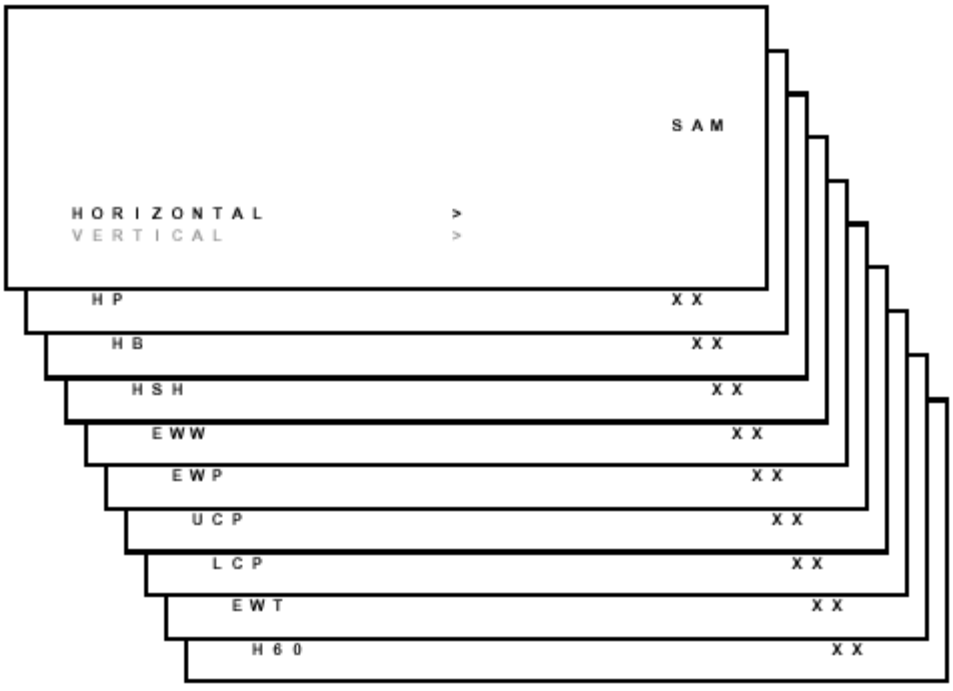

Horizontal:

- **Horizontal Parallelogram (HP)** Align straight vertical lines in the top and the bottom; vertical rotation around the center.
- **Horizontal Bow (HB)** Align straight horizontal lines in the top and the bottom; horizontal rotation around the center.

- **Horizontal Shift (HSH)** Align the horizontal center of the picture to the horizontal center of the CRT.
- **East West Width (EWW)** Align the picture width until the complete test pattern is visible.
- **East West Parabola (EWP)** Align straight vertical lines at the sides of the screen.
- **Upper Corner Parabola (UCP)** Align straight vertical lines in the upper corners of the screen.
- **Lower Corner Parabola (LCP)** Align straight vertical lines in the lower corners of the screen.
- **East West Trapezium (EWT)** Align straight vertical lines in the middle of the screen.
- **H60** Align straight horizontal lines if NTSC system is used (60 Hz) i.s.o. PAL (50 Hz).

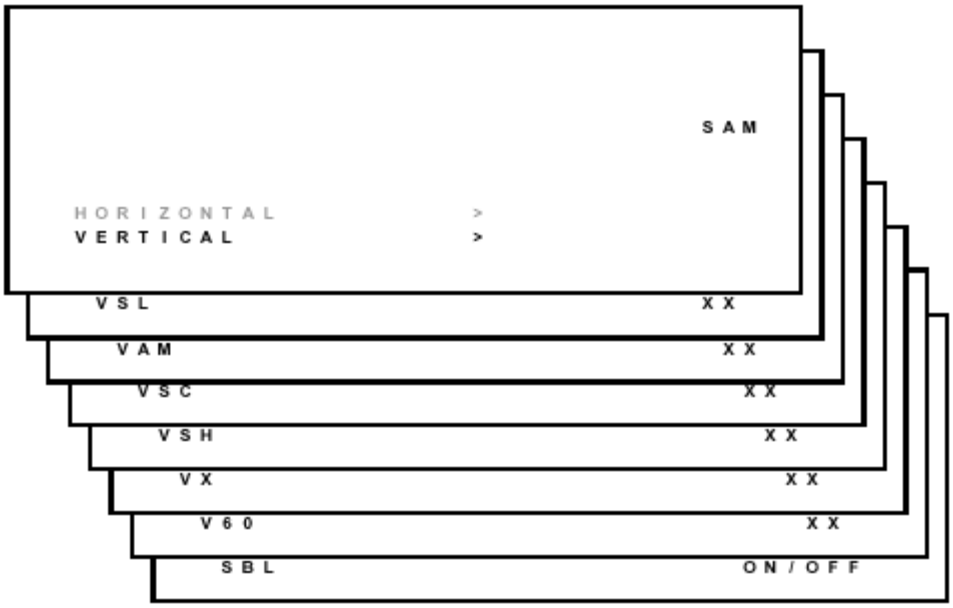

Vertical:

- **Vertical slope (VSL)** Align the vertical center of the picture to the vertical center of the CRT. This is the first of the vertical alignments to perform. For an easy alignment, set SBL to ON.
- **Vertical Amplitude (VAM)** Align the vertical amplitude so that the complete test pattern is visible.
- **Vertical S-Correction (VSC)** Align the vertical linearity, meaning that vertical intervals of a grid pattern must be equal over the entire screen height.
- **Vertical Shift (VSH)** Align the vertical centering so that the test pattern is located vertically in the middle. Repeat the 'vertical amplitude' alignment if necessary.
- **Vertical Zoom (VX)** The vertical zoom is added in for the purpose of development. It helps the designer to set a proper values for the movie expand or movie(16x9) compress. Default value is 25.
- **V60** Align straight vertical lines if NTSC system (60 Hz) is used i.s.o. PAL (50 Hz).
- **Service blanking (SBL)** Switch the blanking of the lower half of the screen ON or OFF (to be used in combination with the vertical slope alignment).

In the table below, you will find the GEOMETRY default values for the different sets.

DEFAULT GEOMETRY VALUES (L01 SMALL SCREEN)									
Alignment	Description	13V	14"	14RF	15RF	17"	19V	20"	21"
HP	Hor. Parallelogram	31	31	31	31	31	31	31	31
HB	Hor. Bow	31	31	31	31	31	31	31	31
HSH	Hor. Shift	23	35	23	35	35	23	35	35
EWW	East West Width	-	-	-	-	-	-	-	-
EWP	East West Parabola	-	-	-	-	-	-	-	-
UCP	Upper Corner Parabola	-	-	-	-	-	-	-	-
LCP	Lower Corner Parabola	-	-	-	-	-	-	-	-
EWT	East West Trapezium	-	-	-	-	-	-	-	-
VSL	Vert. Slope	31	33	31	33	33	31	33	33
VAM	Vert. Amplitude	26	26	26	26	26	26	26	26
VSC	Vert. S-correction	23	23	23	23	23	23	23	23
VSH	Vert. Shift	30	35	30	35	35	30	35	35
VX	Vert. Zoom	-	-	-	-	-	-	-	-
H60	Hor. Shift offset (60 Hz)	0	9	0	9	9	0	9	9
V60	Vert. Shift offset (60 Hz)	0	-2	0	-2	-2	0	-2	-2
Abbreviations: V= visual, RF= Real Flat									

Audio

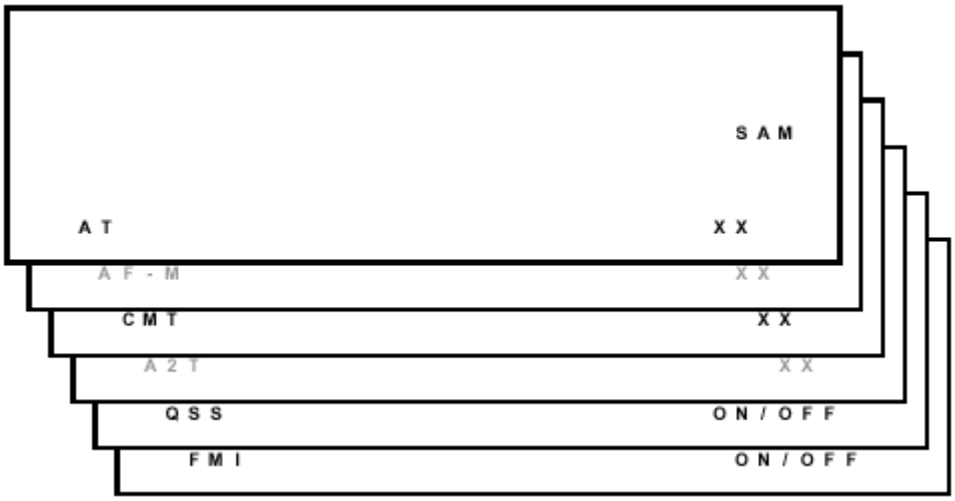

No alignments are needed for the audio sub menu. Use the given default values.

AT

Default value is 8.

CMT

Default value is 42.

QSS

OFF for mono sets, ON for stereo sets.

FMI

OFF for mono sets, ON for stereo sets.

Philips Consumer Electronics

Technical Service Data

Service and Quality
Service Publications Dept.
One Philips Drive
P.O. Box 14810
Knoxville, TN 37914

Manual 7602
Model no.: 20LX200125
First Publish: 5-10-2001
Rev. Date: 10-16-2002
Print Date: 06/04/2007

Training Information

REFER TO SAFETY GUIDELINES

SAFETY NOTICE: ANY PERSON ATTEMPTING TO SERVICE THIS CHASSIS MUST FAMILIARIZE HIMSELF WITH THE CHASSIS AND BE AWARE OF THE NECESSARY SAFETY PRECAUTIONS TO BE USED WHEN SERVICING ELECTRONIC EQUIPMENT CONTAINING HIGH VOLTAGES.

CAUTION: USE A SEPARATE ISOLATION TRANSFORMER FOR THIS UNIT WHEN SERVICING

© Philips Electronics North America Corporation *Visit our World Wide Web Site at http://www.forceonline.com*

Circuit Description

Block diagram
Testpoint overview Main panel (BTSC-NDBX)
Testpoint overview (partly) Main Panel (BTSC-DBX)
Testpoint overview CRT panel
I2C and Supply Voltage diagram

Note: For a good understanding of the following circuit descriptions, please use the block diagram or the electrical diagrams. Where necessary, you will find a separate drawing for clarification.

Chasssis Introduction

The L8/M8 chassis is a global TV chassis for the model year 2001 and is used for TV sets with screen sizes from 14" - 21".
The standard architecture consists of a Main panel, a Picture Tube panel, a Side I/O panel and a Top Control panel.
The Main panel consists primarily of conventional components with hardly any surface mounted devices.

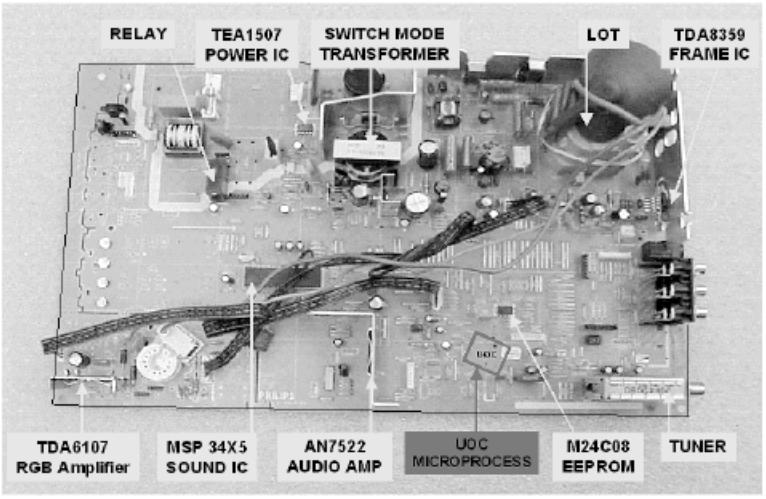

The functions for video processing, microprocessor (µP) and teletext (TXT) decoder are combined in one IC (TDA958xH), the so-called Ultimate One Chip (UOC). This chip is (surface) mounted on the copper side of the LS

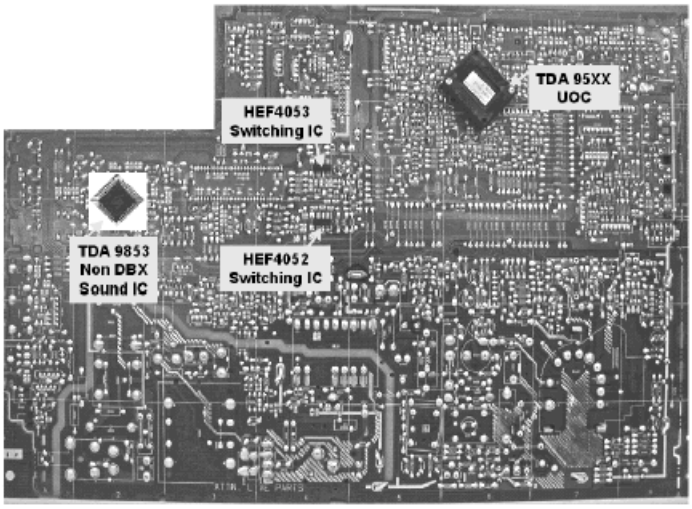

The L8/M8 is divided into 2 basic systems, i.e. mono and stereo sound. While the audio processing for the mono sound is done in the audio block of the UOC, an external audio processing IC is used for stereo sets. The tuning system features 181 channels with on-screen display. The main tuning system uses a tuner, a microcomputer, and a memory IC mounted on the main panel.
The microcomputer communicates with the memory IC, the customer keyboard, remote receiver, tuner, signal processor IC and the audio output IC via the I 2 C bus. The memory IC retains the settings for favorite stations, customer-preferred settings, and service / factory data. The on-screen graphics and closed caption decoding are done within the microprocessor, and then sent to the signal processor IC to be added to the main signal.
The chassis utilizes a Switching Mode Power Supply (SMPS) for the main voltage source. The chassis has a 'hot' ground reference on the primary side and a cold ground reference on the secondary side of the power supply and the rest of the chassis.

Audio Signal Processing

Stereo

In stereo sets, the signal goes via the SAW filter (position 1002), to the audio demodulator part of the UOC IC 7200. The audio output on pin 48 goes to the stereo decoder 7831 or 7861. The switch inside this IC selects either the internal decoder or an external source.
There are two stereo decoders used:
1. a BTSC DBX stereo/SAP decoder (MSP34X5 at position 7831) for the highest specified sets and
2. a BTSC non-DBX stereo decoder (TDA 9853 at position 7861) for BTSC Economic.

The output is fed to the to the audio amplifier (AN7522 at position 7901). The volume level is controlled at this IC (pin 9) by a control line (VolumeMute) from the microprocessor. The audio signal from 7901 is then sent to the speaker / headphone output panel.

Audio signal processing

Mono

In mono sets, the signal goes via the SAW filter (position 1002), to the audio demodulator part of the UOC IC 7200. The audio output on pin 48 goes, via the smart sound circuit (7941 for Bass and 7942 for Treble) and buffer 7943, to the audio amplifier (AN7523 at position 7902).
The volume level is controlled at this IC (pin 9) by a 'VolumeMute' control line from the microprocessor.

The audio signal from IC 7902 is then sent to the speaker / headphone output panel.

Mono set

Video Signal Processing

The processing circuits listed above are all integrated in the UOC TV processor. The surrounding components are for the adaptation of the selected application. The I 2 C bus is for defining and controlling the signals.

RF signal processing

The incoming RF signal goes to the tuner (pos. 1000), where the 45.75 MHz IF signal is developed and amplified. The IF signals then exits the tuner from pin 11 to pass through the SAW filters (pos. 1002). The shaped signal is then applied to the IF processor part of the UOC (pos. 7200).
Tuner AGC (Automatic Gain Control) will reduce the tuner gain and thus the tuner output voltage when receiving strong RF signals. Adjust the AGC takeover point via the Service Alignment Mode (SAM). The tuner AGC starts working when the video-IF input reaches a certain input level. Adjust this level via the I 2 C bus. The tuner AGC signal goes to the tuner (pin 1) via the open collector output (pin 22) of the UOC.
The IC also generates an Automatic Frequency Control (AFC) signal that goes to the tuning system via the I 2 C bus, to provide frequency correction when needed. The demodulated composite video signal is available at pin 38 and then buffered by transistor 7201.

Video source selection

The Composite Video Blanking Signal (CVBS) from buffer 7201 goes to the audio carrier trap filters (1200, 1201, or 1202 depending on the system used) to remove the audio signal. The signal then goes to pin 40 of IC 7200. The internal input switch selects the following input signals:

- Pin 40: terrestrial CVBS input
- Pin 42: external AV1 CVBS input
- Pin 44: external Side I/O CVBS or AV2 Luminance (Y) input
- Pin 45: external AV2 Chrominance (C) input

Once the signal source is selected, a chroma filter calibration is performed. The received color burst sub-carrier frequency is used for this. Correspondingly, the chroma band pass filter for PAL/NTSC processing or the cloche filter for SECAM processing is switched on. The selected luminance (Y) signal is supplied to the horizontal and vertical synchronization processing circuit and to the luminance processing circuit. In the luminance-processing block, the luminance signal goes to the chroma trap filter. This trap is switched 'on' or 'off' depending on the color burst detection of the chroma calibration circuit.
The group delay correction part can be switched between the BG and a flat group delay characteristic. This has the advantage that in multi-standard receivers no compromise has to be made for the choice of the SAW filter.

Figure 1

Video demodulation

The color decoder circuit detects whether the signal is a PAL, NTSC or SECAM signal. The result is made known to the auto system manager. The PAL/NTSC decoder has an internal clock generator, which is stabilized to the required frequency by using the 12 MHz clock signal from the reference oscillator of the microcontroller / teletext decoder.
The base-band delay line is used to obtain a good suppression of cross color effects.
The Y signal and the delay line outputs U and V are applied to the luminance / chroma signal processing part of the TV processor.

Luminance / Chrominance signal processing

The output of the YUV separator is fed to the internal YUV switch, which switches between the output of the YUV separator or the external YUV (for DVD or PIP) on pins 51-53. Pin 50 is the input for the insertion control signal called 'FBL-1'. When this signal level becomes higher than 0.9 V (but less than 3 V), the RGB signals at pins 51, 52 and 53 are inserted into the picture by using the internal switches.
Also some picture improvement features are implemented in this part:

- **Black stretch** This function corrects the black level of incoming signals, which have a difference between the black level and the blanking level. The amount of extension depends upon the difference between actual black level and the darkest part of the incoming video signal level. It is detected by means of an internal capacitor.
- **White stretch** This function adapts the transfer characteristic of the luminance amplifier in a non-linear way depending on the average picture content of the luminance signal. It operates in such a way that maximum stretching is obtained when signals with a low video level are received. For bright pictures, stretching is not active.
- **Dynamic skin tone correction**This circuit corrects (instantaneously and locally) the hue of those colors which are located in the area in the UV plane that matches the skin tone. The correction is dependent on the luminance, saturation and distance to the preferred axis.

The YUV signal is then fed to the color matrix circuit, which converts it to R, G and B signals. The OSD/TXT signal from the microprocessor is mixed with the main signal at this point, before being output to the CRT board (pins 56, 57 and 58).

RGB control

The RGB control circuit enables the picture parameters contrast, brightness and saturation to be adjusted, by using a combination of the user menus and the remote control.
Additionally automatic gain control for the RGB signals via cut-off stabilization is achieved in this functional block to obtain an accurate biasing of the picture tube. Therefor this block inserts the cut-off point measuring pulses into the RGB signals during the vertical retrace period.
The following additional controls are used:

- **Black current calibration loop** Because of the 2-point black current stabilization circuit, both the black level and the amplitude of the RGB output signals depend on the drive characteristics of the picture tube. The system checks whether the returning measuring currents meet the requirements, and adapt the output level and gain of the circuit when necessary. After stabilization of the loop, the RGB drive signals are switched on. The 2-point black level system adapts the drive voltage for each cathode in such a way that the two measuring currents have the right value. This is done with the measurement pulses during the frame flyback. During the first frame, three pulses with a current of 8 μA are generated to adjust the cut off voltage. During the second frame, three pulses with a current of 20 μA are generated to adjust the 'white drive'. This has as a consequence, that a change in the gain of the output stage will be compensated by a gain change of the RGB control circuit. Pin 55 (BLKIN) of the UOC is used as the feedback input from the CRT base panel.

- **Blue stretch** This function increases the color temperature of the bright scenes (amplitudes which exceed a value of 80% of the nominal amplitude). This effect is obtained by decreasing the small signal gain of the red and green channel signals, which exceed this 80% level.
- **Beam current limiting** A beam current limiting circuit inside the UOC handles the contrast and brightness control for the RGB signals. This prevents the CRT from being overdriven, which could otherwise cause serious damage in the line output stage. The reference used for this purpose is the DC voltage on pin 54 (BLCIN) of the TV processor. Contrast and brightness reduction of the RGB output signals is therefore proportional to the voltage present on this pin. Contrast reduction starts when the voltage on pin 54 is lower than 2.8 V. Brightness reduction starts when the voltage on pin 54 is less than 1.7 V. The voltage on pin 54 is normally 3.3 V (limiter not active). During set switch-off, the black current control circuit generates a fixed beam current of 1 mA. This current ensures that the picture tube capacitance is discharged. During the switch-off period, the vertical deflection is placed in an over-scan position, so that the discharge is not visible on the screen.

RGB amplifier

From outputs 56, 57 and 58 of IC 7200 the RGB signals are applied to the analog output amplifiers on the CRT panel. The R-signal is amplified by a circuit build around transistors Q7311, 7312 and 7313, which drives the picture tube cathodes.
The supply voltage for the amplifier is +160 V and is derived from the line output stage.

Synchronization

Inside IC 7200 part D the vertical and horizontal sync pulses are separated. These 'H' and 'V' signals are synchronised with the incoming CVBS signal. They are then fed to the H-and V-drive circuits and to the OSD/TXT circuit for synchronization of the On Screen Display and Teletext (CC) information.

Deflection

Horizontal drive

The horizontal drive signal is obtained from an internal VCO, which is running at twice the line frequency. This frequency is divided by two, to lock the first control loop to the incoming signal.
When the IC is switched 'on', the 'Hdrive' signal is suppressed until the frequency is correct.
The 'Hdrive' signal is available at pin 30. The 'Hflybk' signal is fed to pin 31 to phase lock the horizontal oscillator, so that Q7462 cannot switch 'on' during the flyback time.
The 'EWdrive' signal for the E/W circuit (if present) is available on pin 15, where it drives transistor 7400 to make linearity corrections in the horizontal drive.
When the set is switched on, the '+8V' voltage goes to pin 9 of IC 7200. The horizontal drive starts up in a soft start mode.
It starts with a very short TON time of the horizontal output transistor. The TOFF of the transistor is identical to the time in normal operation. The starting frequency during switch on is therefore about 2 times higher than the normal value. The 'on' time is slowly increased to the nominal value in 1175 ms.
When the nominal value is reached, the PLL is closed in such a way that only very small phase corrections are

necessary. The 'EHTinformation' line on pin 11 is intended to be used as a 'X-ray' protection. When this protection is activated (when the voltage exceeds 6 V), the horizontal drive (pin 30) is switched 'off' immediately. If the 'H-drive' is stopped, pin 11 will become low again. Now the horizontal drive is again
switched on via the slow start procedure.
The 'EHTinformation' line (Aquadag) is also fed back to the UOC IC 7200 pin 54, to adjust the picture level in order to compensate for changes in the beam current.

The 'filament' voltage is monitored for 'no voltage' or 'excessive voltage'. This voltage is rectified by diode 6447 and fed to the emitter of transistor 7443. If this voltage goes above 6.8 V, transistor 7443 will conduct, making the 'EHT0' line 'high'. This will immediately switch off the horizontal drive (pin 30) via the slow stop procedure.
The horizontal drive signal exits IC 7200 at pin 30 and goes to 7462, the horizontal driver transistor. The signal is amplified and coupled to the base circuit of 7460, the horizontal output transistor. This will drive the line output transformer (LOT) and associated circuit. The LOT provides the extra high voltage (EHT), the VG2 voltage and the focus and filament voltages for the CRT, while the line output circuit drives the horizontal deflection coil.

Vertical drive

A divider circuit performs the vertical synchronization. The vertical ramp generator needs an external resistor (R3245, pin 20) and capacitor (C2244, pin 21). A differential output is available at pins 16 and 17, which are DC-coupled with the vertical output stage. During the insertion of RGB signals, the maximum vertical frequency is increased to 72 Hz so that the circuit can also synchronize on signals with a higher vertical frequency like VGA.
To avoid damage of the picture tube when the vertical deflection fails, the guard output is fed to the beam current limiting input. When a failure is detected the RGB-outputs are blanked. When no vertical deflection output stage is connected this guard circuit will also blank the output signals.
These 'V_DRIVE+' and 'V_DRIVE-' signals are applied to the input pins 7 and 1 of IC 7471 (vertical deflection amplifier).
These are voltage driven differential inputs. As the driver device (IC 7200) delivers output currents, R3473 and R3475 convert them to voltage. The differential input voltage is compared with the voltage across measuring resistor R3471 that provides internal feedback information. The voltage across this measuring resistor is proportional to the output current, which is available at pin 5 where it drives the
vertical deflection coil (connector 0222).
IC 7471 is supplied by +/-13 V. The vertical flyback voltage is generated at pin 3.

Power Supply

Figure 1

Figure 2

Power Supply Introduction

The supply is a Switching Mode Power Supply (SMPS). The frequency of operation varies with the circuit load. This 'Quasi-Resonant Flyback' behavior has some important benefits compared to a 'hard switching' fixed frequency Flyback converter. The efficiency can be improved up to 90%, which results in lower power consumption. Moreover the supply runs cooler and safety is enhanced.
The power supply starts operating when a DC voltage goes from the rectifier bridge via T5520, R3532 to pin 8. The

operating voltage for the driver circuit is also taken from the 'hot' side of this transformer.
The switching regulator IC 7520 starts switching the FET 'on' and 'off', to control the current flow through the primary winding of transformer 5520. The energy stored in the primary winding during the 'on' time is delivered to the secondary windings during the 'off' time.
The 'MainSupply' line is the reference voltage for the power supply. It is sampled by resistors 3543 and 3544 and fed to the input of the regulator 7540 / 6540. This regulator drives the feedback optocoupler 7515 to set the feedback control voltage on pin 3 of 7520.

The power supply in the set is 'on' any time AC power goes to the set.

Derived Voltages

The voltages supplied by the secondary windings of T5520 are:

- 'MainAux' for the audio circuit (voltage depends on set execution, see table below),
- 3.3 V and 3.9 V for the microprocessor and
- 'MainSupply' for the horizontal output (voltage depends on set execution, see table below).

Other supply voltages are provided by the LOT. It supplies +50 V (only for large screen sets), +13 V, +8 V, +5 V and a +200 V source for the video drive. The secondary voltages of the LOT are monitored by the 'EHTinformation' lines. These lines are fed to the video processor part of the UOC IC 7200
on pins 11 and 34.
This circuit will shut 'off' the horizontal drive in case of over- voltage or excessive beam current.

Figure 3

Power supply voltages				
Screen Size	Voltage name	Measuring point	Value	Remark
14", 15RF, 17", 20", 21"	MainSupply	P6 (C2561)	95 V	
	MainAux	P5 (C2564)	11 V	Stereo 2x3 W and Mono 1x2 W, 3 W, 4 W
			10 V	Stereo 2x1 W and Mono 1x1 W
All others	MainSupply	P6 (C2561)	130 V	21/25/29RF and 25/27/32/35V
			143 V	25/28/29SF, 25/28BLD, 25/28BLS, 28/32WS, 24/28BLDWS & BLSWS
	MainAux	P6 (C2564)	12 V	Stereo 2x1 W, 3 W, 5 W
			10 V	Mono 1x1 W

Degaussing

When the set is switched on, the degaussing relay 1515 is immediately activated as transistor 7580 is conducting. Due to the RC-time of R3580 and C2580, it will last about 3 to 4 seconds before transistor 7580 is switched off.

Basic IC Functionality

For a clear understanding of the Quasi-Resonant behavior, it is possible to explain it by a simplified circuit diagram (see Figure below). In this circuit diagram, the secondary side is transferred to the primary side and the transformer is replaced by an inductance LP. CD is the total drain capacitance including the resonance capacitor CR, parasitic output capacitor COSS of the MOSFET and the winding capacitance CW of the transformer. The turns ratio of the transformer is represented by n (NP/NS).

In the Quasi-Resonant mode each period can be divided into four different time intervals, in chronological order:

- **Interval 1: t0 < t < t1 primary stroke** At the beginning of the first interval, the MOSFET is switched 'on' and

energy is stored in the primary inductance (magnetization). At the end, the MOSFET is switched 'off' and the second interval starts.

- **Interval 2: t1 < t < t2 commutation time** In the second interval, the drain voltage will rise from almost zero to VIN+n•(VOUT +VF). VF is the forward voltage drop of de diode that will be omitted from the equations from now on. The current will change its positive derivative, corresponding to VIN/LP, to a negative derivative, corresponding to -n•VOUT /LP.
- **Interval 3: t2 < t < t3 secondary stroke** In the third interval, the stored energy is transferred to the output, so the diode starts to conduct and the inductive current IL will decrease. In other words, the transformer will be demagnetized. When the inductive current has become zero the next interval begins.
- **Interval 4: t3 < t < t00 resonance time** In the fourth interval, the energy stored in the drain capacitor CD will start to resonate with the inductance LP. The voltage and current waveforms are sinusoidal waveforms. The drain voltage will drop from VIN+n•VOUT to VIN-n•VOUT.

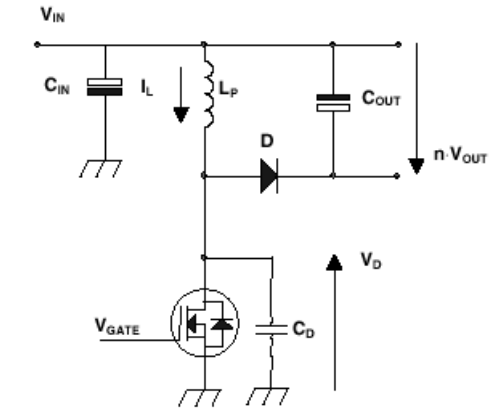

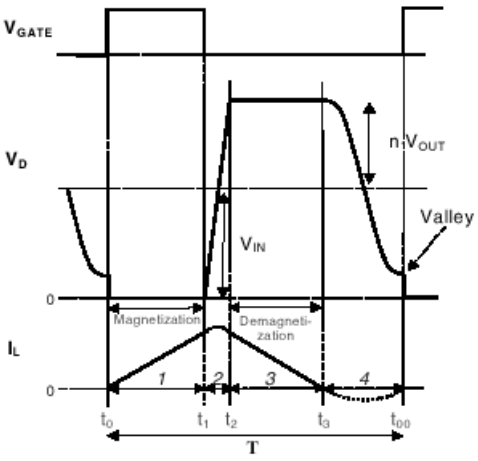

Frequency Behavior

The frequency in the QR-mode is determined by the power stage and is not influenced by the controller (important parameters are LP and CD). The frequency varies with the input voltage VIN and the output power POUT. If the required output power increases, more energy has to be stored in the transformer. This leads to longer magnetizing tPRIM and demagnetizing tSEC times, which will decrease the frequency.
See the frequency versus output power characteristics below. The frequency characteristic is not only output power-, but also input voltage dependent. The higher the input voltage, the smaller tPRIM, so the higher the frequency will be.

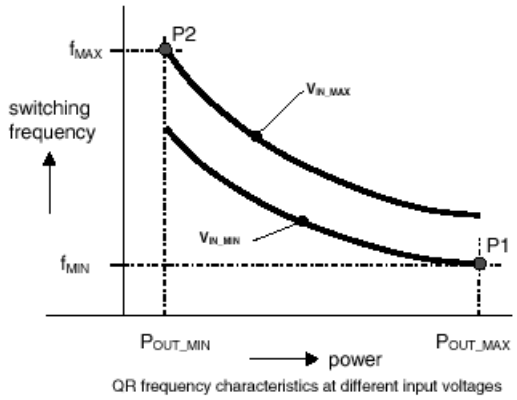

QR frequency characteristics at different input voltages

Point P1 is the minimum frequency fMIN that occurs at the specified minimum input voltage and maximum output power required by the application. Of course the minimum frequency has to be chosen above the audible limit (>20 kHz).

Start-up Sequence

When the rectified AC voltage VIN (via the center tap connected to pin 8) reaches the Mains dependent operation level (Mlevel: between 60 and 100 V), the internal 'Mlevel switch' will be opened and the start-up current source is enabled to charge capacitor C2521 at the VCC pin as shown below.
The 'soft start' switch is closed when the VCC reaches a level of 7 V and the 'soft start' capacitor CSS (C2522, between pin 5 and the sense resistor R3526), is charged to 0.5 V.
Once the VCC capacitor is charged to the start-up voltage VCC-start (11 V), the IC starts driving the MOSFET. Both internal current sources are switched 'off' after reaching this start-up voltage. Resistor RSS (3524) will discharge the 'soft start' capacitor, such that the peak current will slowly increase. This to prevent 'transformer rattle'.
During start-up, the VCC capacitor will be discharged until the moment that the primary auxiliary winding takes over this voltage.

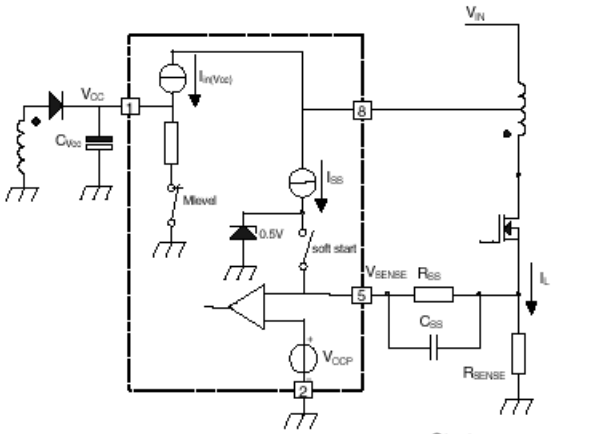

Start-up sequence

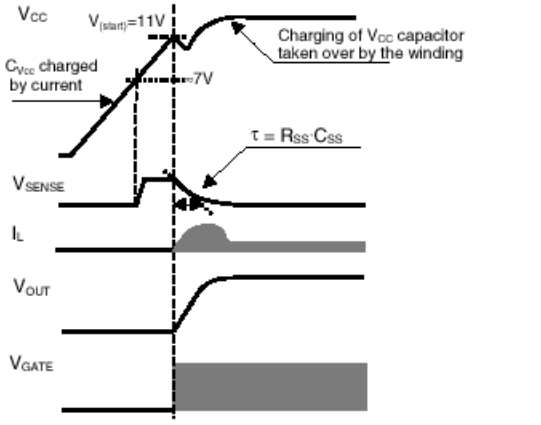

The moment that the voltage on pin 1 drops below the 'under voltage lock out' level (UVLO = ??9 V), the IC will stop switching and will enter a safe restart from the rectified mains voltage.

Operation

The supply can run in three different modes depending on the output power:

- **Quasi-Resonant mode (QR)** The QR mode, described above, is used during normal operation. This will give a high efficiency.
- **Frequency Reduction mode (FR)** The FR mode (also called VCO mode) is implemented to decrease the switching losses at low output loads. In this way the efficiency at low output powers is increased, which enables power consumption smaller than 3 W during stand-by. The voltage at the pin 3 (Ctrl) determines where the frequency reduction starts. An external Ctrl voltage of 1.425 V corresponds with an internal VCO level of 75 mV. This fixed VCO level is called VVCO,start .
  The frequency will be reduced in relation to the VCO voltage between 75 mV and 50 mV (at levels larger than 75 mV, Ctrl voltage < 1.425V, the oscillator will run on maximum frequency foscH = 175 kHz typically). At 50 mV (VVCO,max) the frequency is reduced to the minimum level of 6 kHz. Valley switching is still active in this mode.
- **Minimum Frequency mode (MinF)** At VCO levels below 50 mV, the minimum frequency will remain on 6 kHz, which is called the MinF mode. Because of this low frequency, it is possible to run at very low loads without having any output regulation problems.

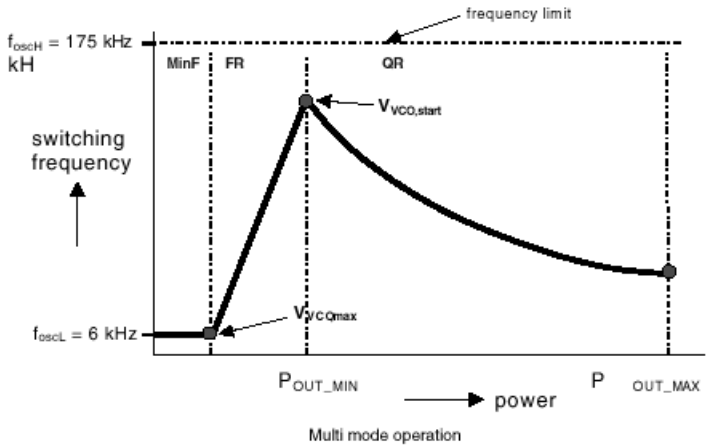

Multi mode operation

Safe-Restart Mode

This mode is introduced to prevent the components from being destroyed during eventual system fault conditions. It is also used for the Burst mode. The Safe-Restart mode will be entered if it is triggered by one of the following functions:

- Over voltage protection,
- Short winding protection,
- Maximum 'on time' protection,
- VCC reaching UVLO level (fold back during overload),
- Detecting a pulse for Burst mode,
- Over temperature protection.

When entering the Safe-Restart mode, the output driver is immediately disabled and latched. The VCC winding will not charge the VCC capacitor anymore and the VCC voltage will drop until UVLO is reached. To recharge the VCC capacitor, the internal current source (I(restart)(VCC)) will be switched 'on' to initiate a new start-up sequence as described before. This Safe-Restart mode will persist until the controller detects no faults or burst triggers.

Standby

The set goes to Standby in the following cases:

- After pressing the 'standby' key on the remote control.
- When the set is in protection mode.

In Standby, the power supply works in 'burst mode'. Burst mode can be used to reduce the power consumption below 1 W at stand-by. During this mode, the controller is active (generating gate pulses) for only a short time and for a longer time inactive waiting for the next burst cycle.
In the active period the energy is transferred to the secondary and stored in the buffer capacitor CSTAB in front of the linear stabilizer (see Figure below). During the inactive period, the load (e.g. microprocessor) discharges this capacitor. In this mode, the controller makes use of the Safe-Restart mode.

Basic Burst mode configuration

The system enters burst mode standby when the microprocessor activates the 'Stdby_con' line. When this line is pulled high, the base of Q7541 is allowed to go high. This is triggered by the current from collector Q7542. When Q7541 turns 'on', the opto-coupler (7515) is activated, sending a large current signal to pin 3 (Ctrl). In response to this signal, the IC stops switching and enters a 'hiccup' mode.

This burst activation signal should be present for longer than the 'burst blank' period (typically 30 ?s): the blanking time prevents false burst triggering due to spikes.
Burst mode standby operation continues until the microcontroller pulls the 'Stdby_con' signal low again. The base of Q7541 is unable to go high, thus cannot turn 'on'.
This will disable the burst mode. The system then enters the start-up sequence and begins normal switching behavior.

For a more detailed description of one burst cycle, three time intervals are defined:

- **t1: Discharge of VCC when gate drive is active** During the first interval, energy is transferred, which result in a ramp-up of the output voltage (VSTAB) in front of the stabilizer. When enough energy is stored in the capacitor, the IC will be switched 'off' by a current pulse generated at the secondary side. This pulse is transferred to the primary side via the opto coupler. The controller will disable the output driver (safe restart mode) when the current pulse reaches a threshold level of 16 mA into the Ctrl pin. A resistor R1 (R3519) is placed in series with the opto coupler, to limit the current going into the Ctrl pin. Meanwhile the VCC capacitor is discharged but has to stay above VUVLO .
- **t2: Discharge of VCC when gate drive is inactive**
  During the second interval, the VCC is discharged to VUVLO. The output voltage will decrease depending on the load.
- **t3: Charge of VCC when gate drive is inactive** The third interval starts when the UVLO is reached. The internal current source charges the VCC capacitor (also the soft start capacitor is recharged). Once the VCC capacitor is charged to the start-up voltage, the driver is activated and a new burst cycle is started.

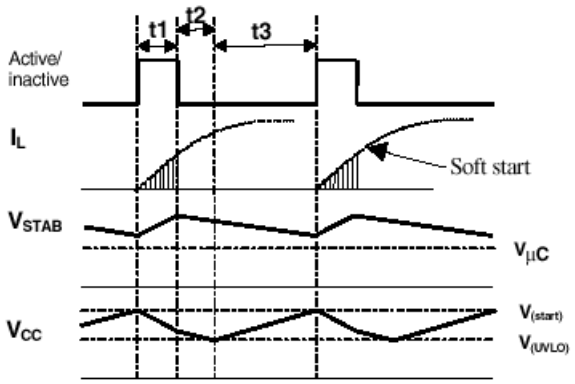

Burst mode waveforms

PS Protection Events

The SMPS IC 7520 has the following protection features:

Demagnetization sense

This feature guarantees discontinuous conduction mode operation in every situation. The oscillator will not start a new primary stroke until the secondary stroke has ended. This is to ensure that FET 7521 will not turn on until the demagnetization of transformer 5520 is complete.The function is an additional protection feature against:

- saturation of the transformer,
- damage of the components during initial start-up,
- an overload of the output.

The demag(netization) sense is realized by an internal circuit that guards the voltage (Vdemag) at pin 4 that is connected to VCC winding by resistor R1 (R3522). The Figure below shows the circuit and the idealized waveforms across this winding.

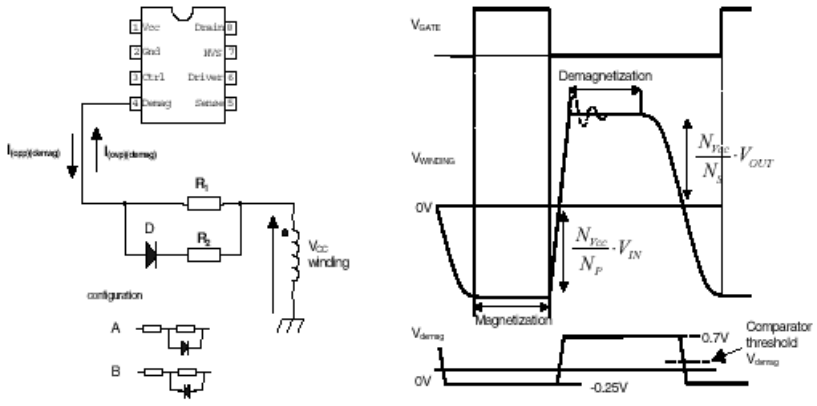

Over Voltage Protection

The Over Voltage Protection ensures that the output voltage will remain below an adjustable level. This works by sensing the auxiliary voltage via the current flowing into pin 4 (DEM) during the secondary stroke. This voltage is a well-defined replica of the output voltage. Any voltage spikes are averaged by an internal filter.
If the output voltage exceeds the OVP trip level, the OVP circuit switches the power MOSFET 'off'.
Next, the controller waits until the 'under voltage lock out' level (UVLO = ± 9 V) is reached on pin 1 (VCC). This is followed by a safe restart cycle, after which switching starts again. This process is repeated as long as the OVP condition exists. The output voltage at which the OVP function trips, is set by the demagnetization resistor R3522.

Over Current Protection

The internal OCP protection circuit limits the 'sense' voltage on pin 5 to an internal level.

Over Power Protection

During the primary stroke, the rectified AC input voltage is measured by sensing the current drawn from pin 4 (DEM). This current is dependent on the voltage on pin 9 of transformer 5520 and the value of R3522. The current informationrmation is used to adjust the peak drain current, which is measured via pin ISENSE.

Short Winding Protection

If the 'sense' voltage on pin 5 exceeds the short winding protection voltage (0.75 V), the converter will stop switching. Once VCC drops below the UVLO level, capacitor C2521 will be recharged and the supply will start again. This cycle will be repeated until the short circuit is removed (safe restart mode). The short winding protection will also protect in case of a secondary diode short circuit. This protection circuit is activated after the leading edge blanking time (LEB).

LEB time

The LEB (Leading Edge Blanking) time is an internally fixed delay, preventing false triggering of the comparator due to current spikes. This delay determines the minimum 'on' time of the controller.

Over Temperature protection

When the junction temperature exceeds the thermal shutdown temperature (typ. 140º C), the IC will disable the driver. When the VCC voltage drops to UVLO, the VCC capacitor will be recharged to the V(start) level. If the temperature is

still too high, the VCC voltage will drop again to the UVLO level (Safe-Restart mode). This mode will persist until the junction temperature drops 8 degrees typically below the shutdown temperature.

Mains dependent operation enabling level

To prevent the supply from starting at a low input voltage, which could cause audible noise, a mains detection is implemented (Mlevel). This detection is provided via pin 8, that detects the minimum start-up voltage between 60 and 100 V. As previous mentioned, the controller is enabled between 60 and 100 V.
An additional advantage of this function is the protection against a disconnected buffer capacitor (CIN). In this case, the supply will not be able to start-up because the VCC capacitor will not be charged to the start-up voltage.

Control

Control Diagram

Introduction

The microprocessor part of the UOC, has the complete control and teletext on board. User menu, Service Default Mode, Service Alignment Mode and Customer Service Mode are generated by the µP. Communication to other ICs is done via the I 2 C-bus.

I 2 C-Bus

The main control system, which consists of the microprocessor part of the UOC (7200), is linked to the external devices (tuner, NVM, MSP, etc) by means of the I 2 C- bus. An internal I 2 C-bus is used to control other signal processing functions, like video processing, sound IF, vision IF, synchronization, etc.

User Interface

The L8/M8 uses a remote control with RC5 protocol. The incoming signal is connected to pin 67 of the UOC. The 'Top Control' keyboard, connected to UOC pin 80, can also control the set. Button recognition is done via a voltage divider. The front LED (6691) is connected to an output control line of the microprocessor (pin 5). It is activated to provide the user information about whether or not the set is working correctly (e.g., responding to the remote control, normal operation (USA only) or fault condition).

In- And Output Selection

For the control of the input and output selections, there are three lines:

- **STATUS1** This signal provides informationrmation to the microprocessor on whether a video signal is available on the SCART1 AV input and output port (only for Europe). This signal is not connected in NAFTA sets.
- **STATUS2** This signal provides informationrmation to the microprocessor on whether a video signal is available on the SCART2 AV input and output port (only for Europe). For sets with an SVHS input it provides the additional informationrmation if a Y/C or CVBS source is present. The presence of an external Y/C source makes this line

'high' while a CVBS source makes the line 'low'.

- **SEL-MAIN-FRNT-RR** This is the source select control signal from the microprocessor. This control line is under user control or can be activated by the other two control lines.

Power Supply Control

The microprocessor part is supplied with 3.3 V and 3.9 V both derived from the 'MainAux' voltage via a 3V3 stabilizer (7560) and a diode.
Two signals are used to control the power supply:

- **Stdby_con** This signal is generated by the microprocessor when over-current takes place at the 'MainAux' line. This is done to enable the power supply into standby burst mode, and to enable this mode during a protection. This signal is 'low' under normal operation conditions and goes to 'high' (3.3 V) under 'standby' and 'fault' conditions.
- **POWER_DOWN** This signal is generated by the power supply. Under normal operating conditions this signal is 'high' (3.3 V). During 'standby' mode, this signal is a pulse train of approx. 10 Hz and a 'high' duration of 5 ms. It is used to give information to the UOC about the fault condition in the Audio amplifier supply circuit. This information is generated by sensing the current on the 'MainAux' line (using voltage drop across R3564 to trigger Q7562). This signal goes 'low' when the DC-current on the 'MainAux' line exceeds 1.6 - 2.0 A. It is also used to give an early warning to the UOC about a power failure. Then the information is used to mute the sound amplifier to prevent a switch off noise and to solve the switch-off spot.

Protection Events

Several protection events are controlled by the UOC:

- **BC protection**, to protect the picture tube from a too high beam current. The UOC has the capability of measuring the normal back level current during the vertical flyback. So if for some reason the CRT circuit is malfunctioning (i.e. high beam current), the normal black current will be out of the 75 μA range, and the UOC will trigger the power supply to shut down. However, this is a high beam-current situation, the TV screen will be bright white before the set is shut down.
- **I 2 C protection**, to check whether all I 2 C IC's are functioning.

In case one of these protections is activated, the set will go into 'standby'.

The 'on' and 'standby' LEDs are controlled via the UOC.

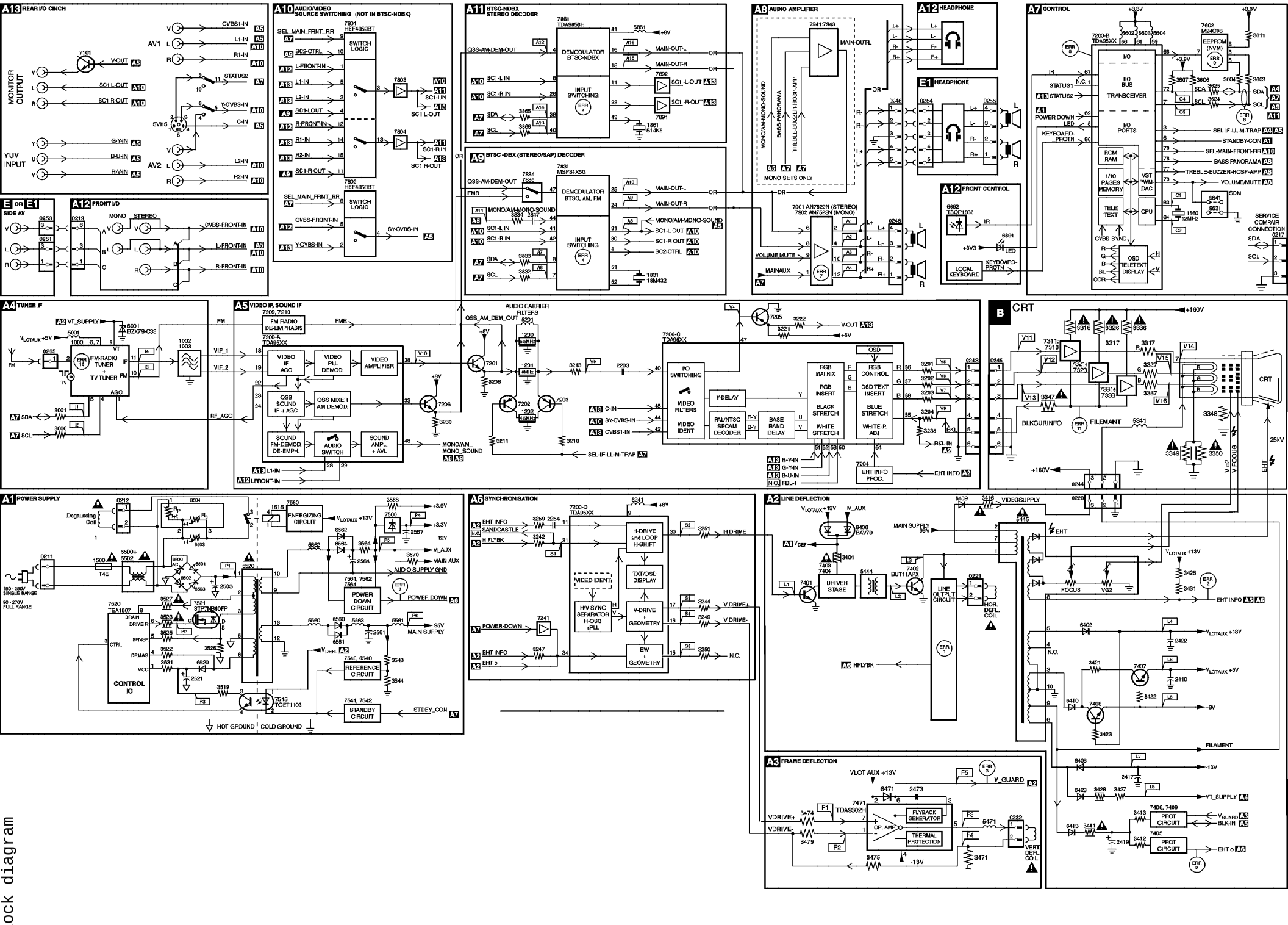

Block diagram

Testpoint overview Main panel (BTSC-NDBX)

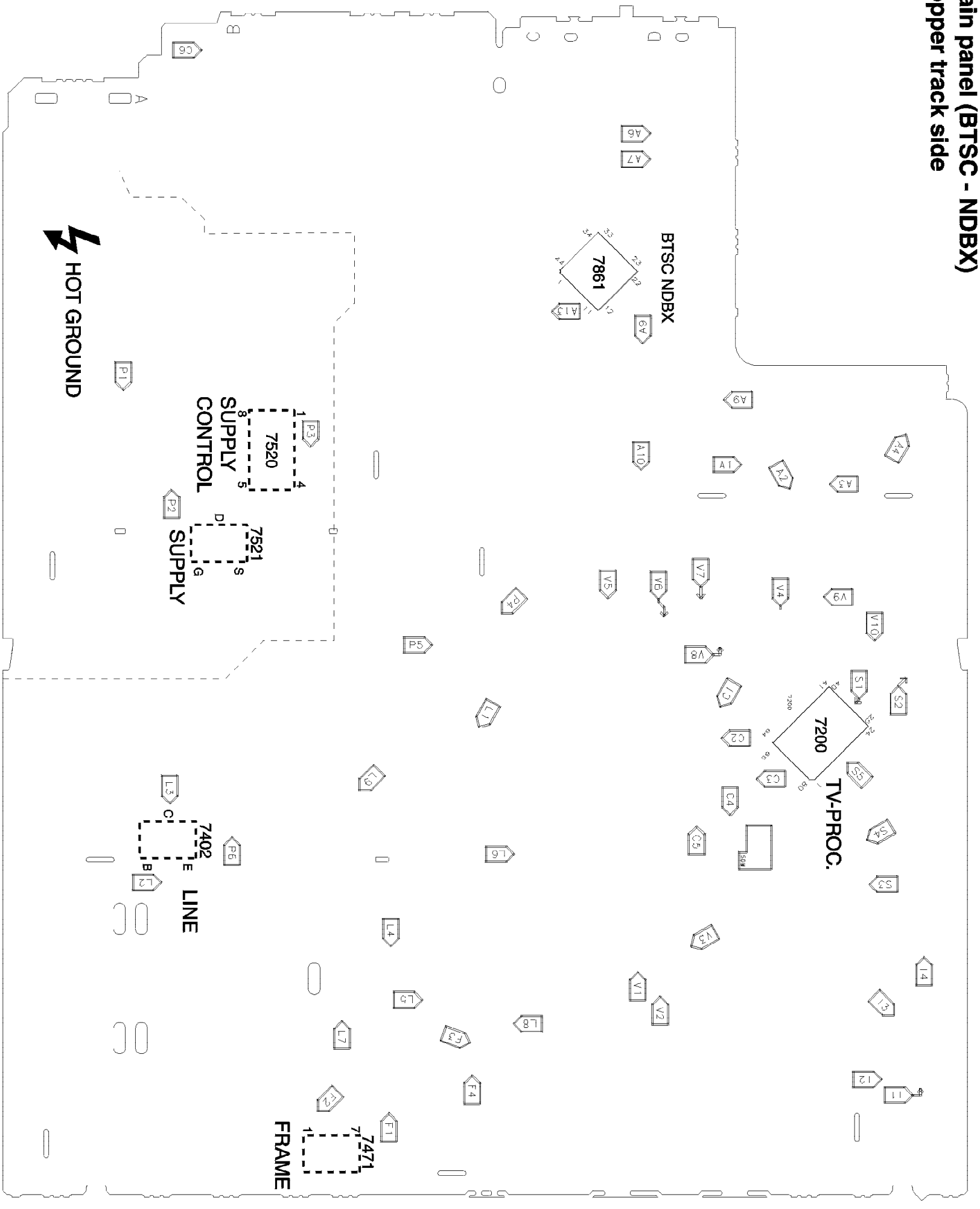

Testpoint overview (partly) Main Panel (BTSC-DBX)

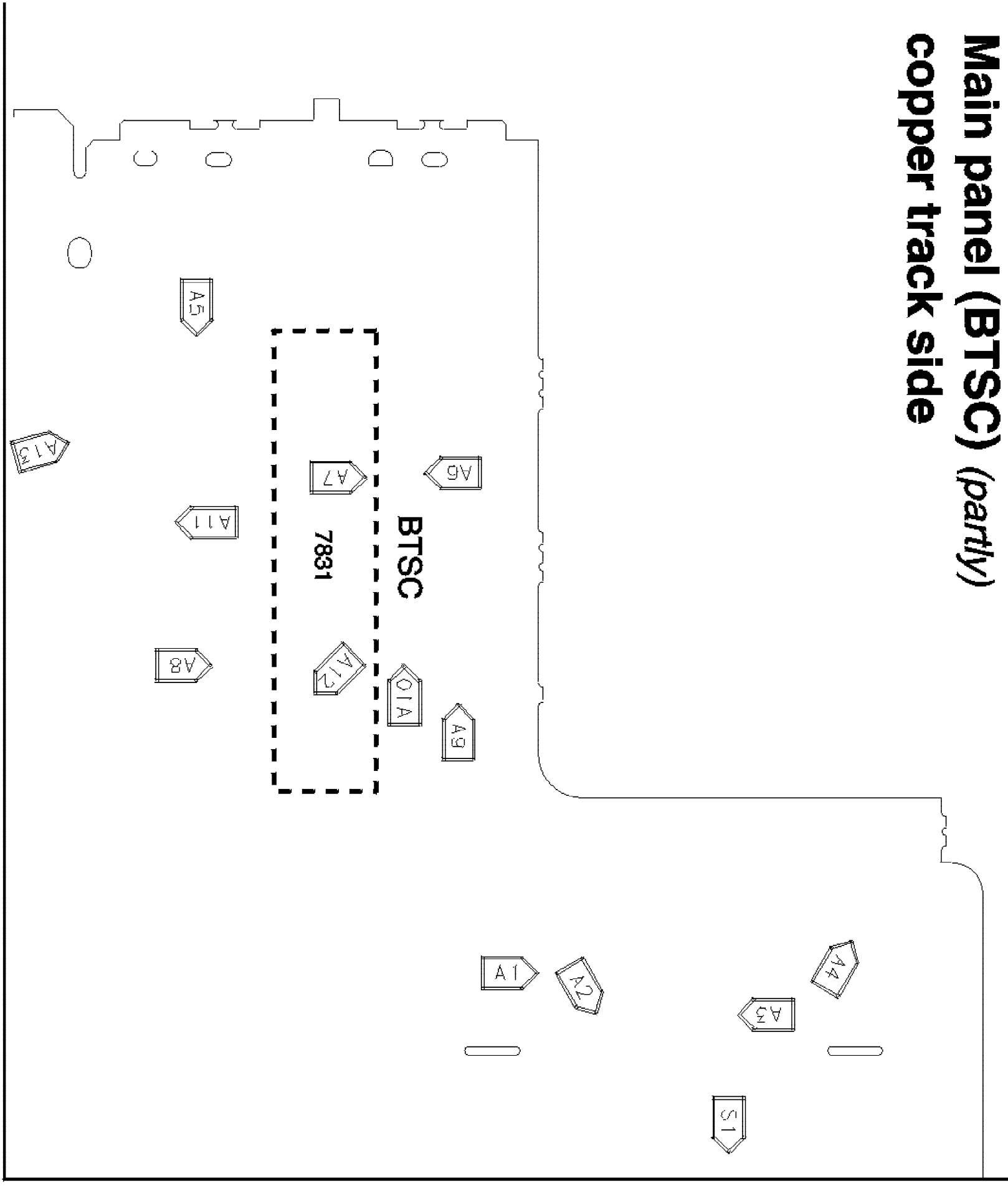

Testpoint overview CRT panel

CRT panel copper track side

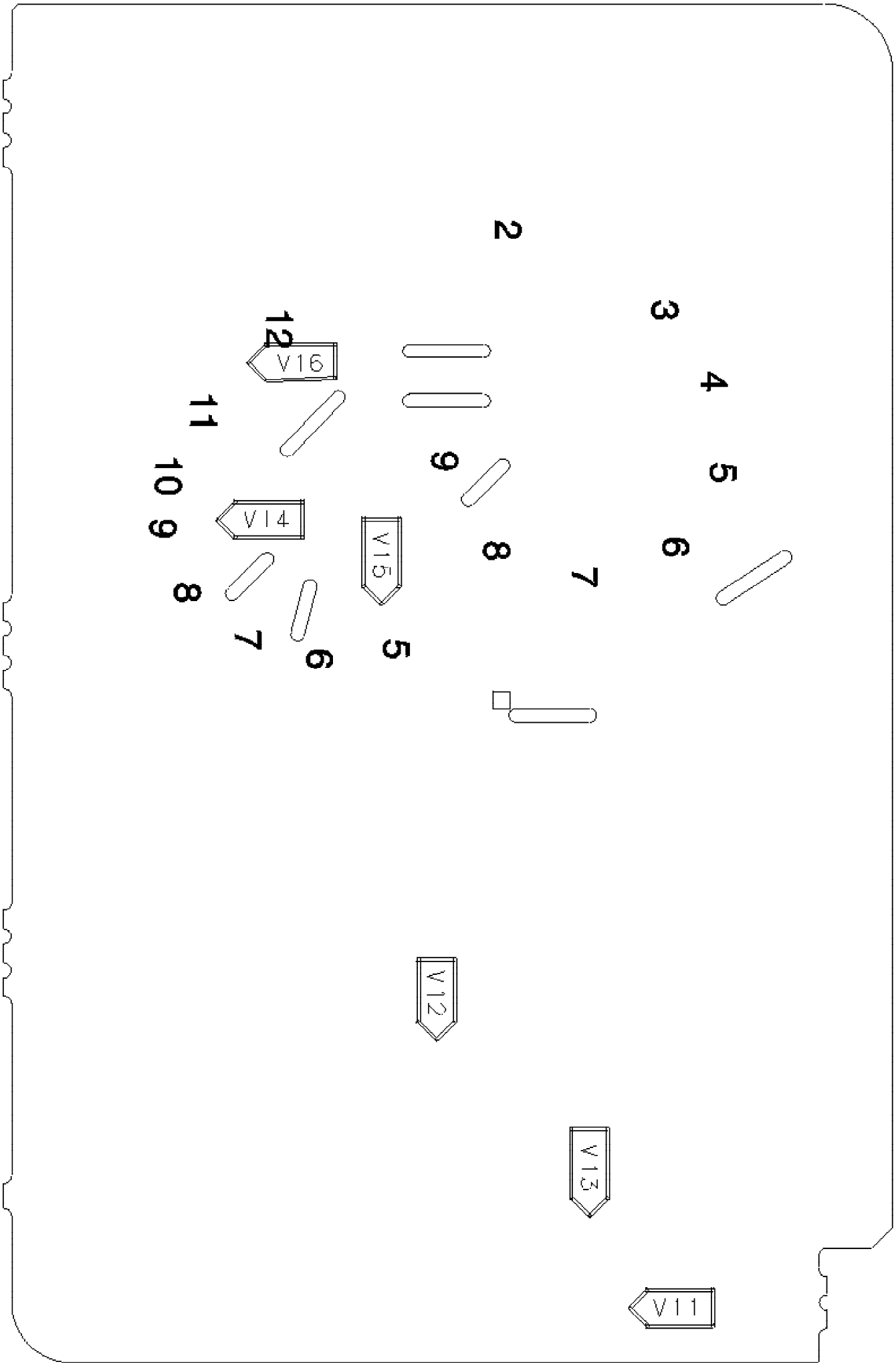

I2C and Supply Voltage diagram

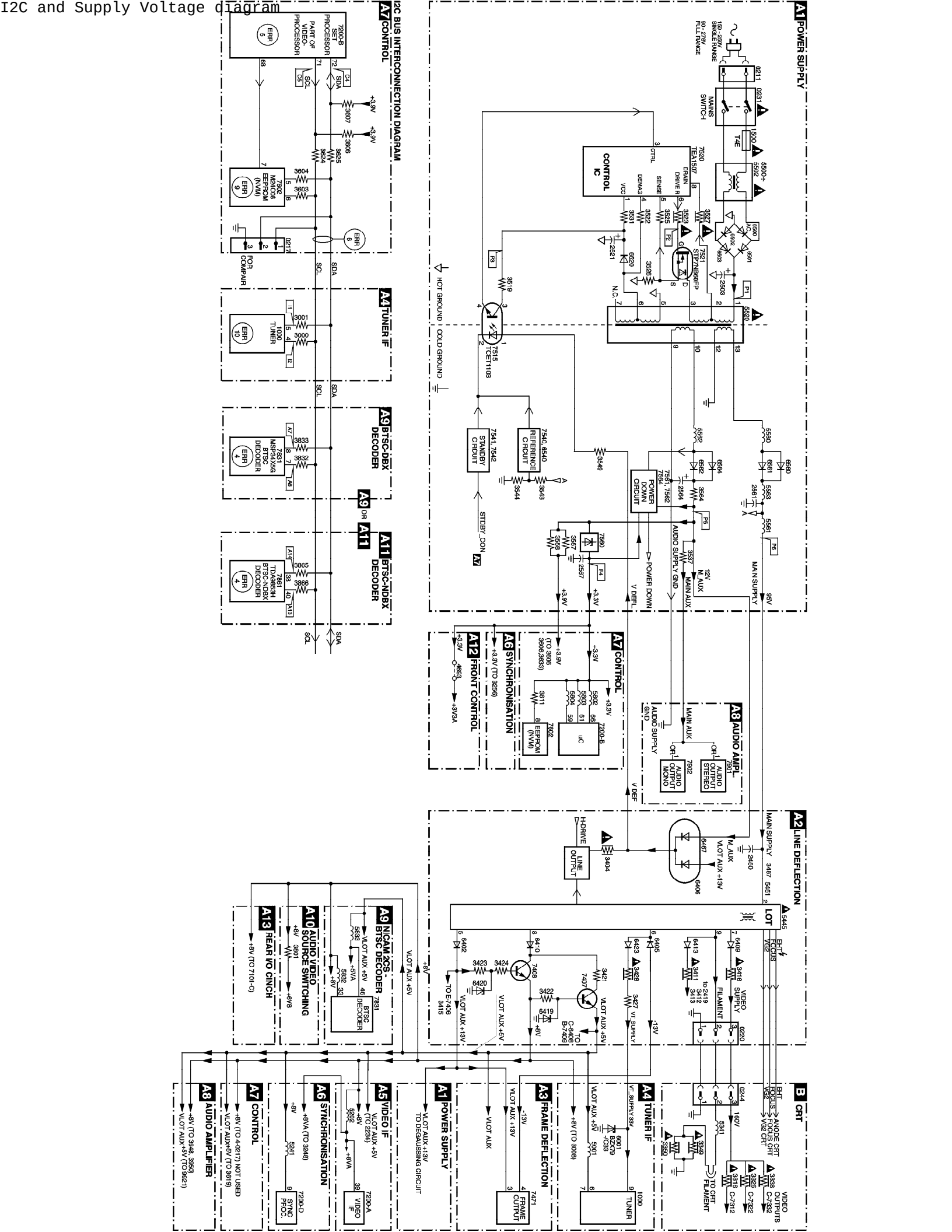

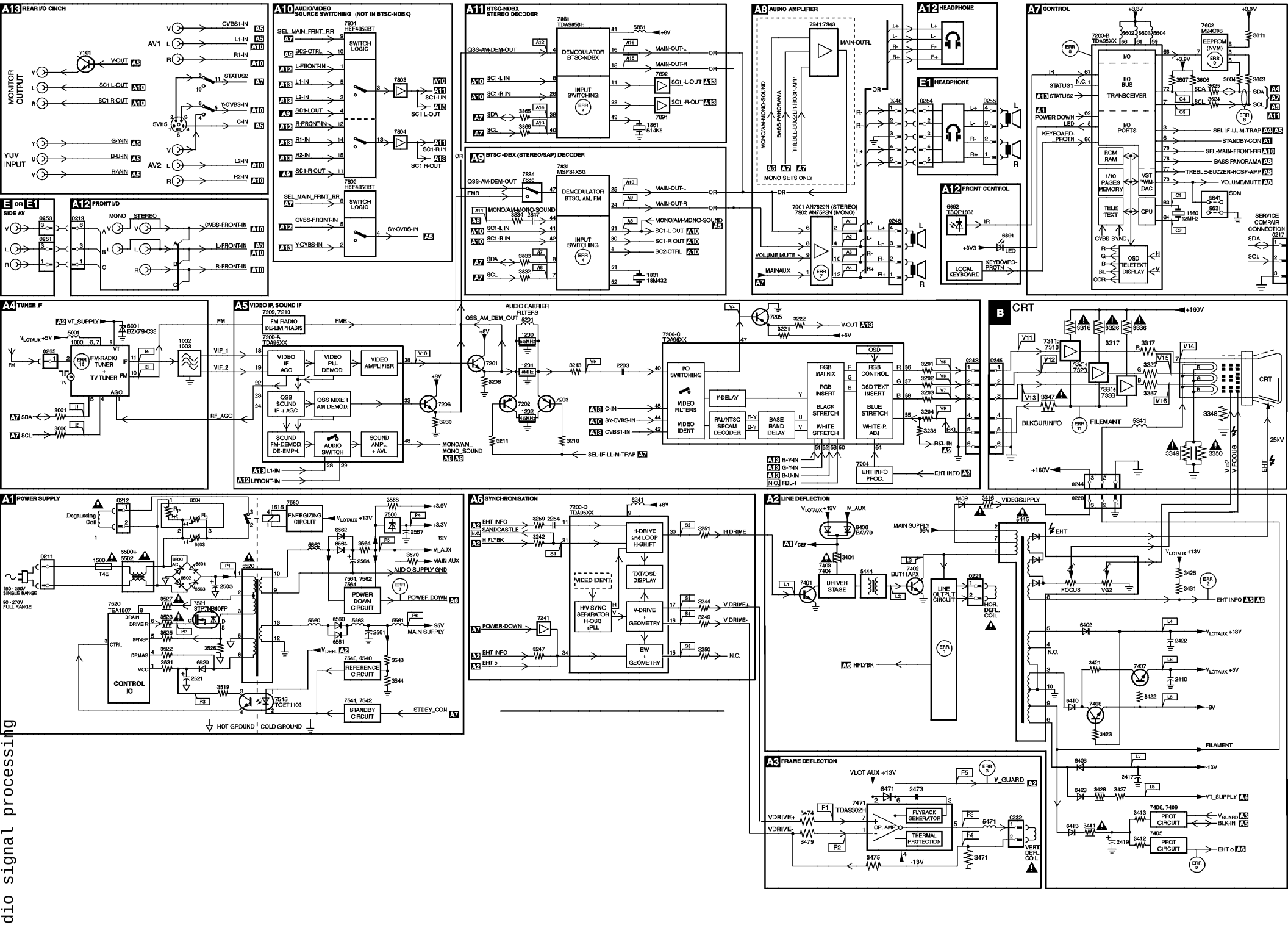
A13 REAR I/O CINCH
A10 AUDIO/VIDEO SOURCE SWITCHING (NOT IN BTSC-NDBX)
A11 BTSC-NDBX STEREO DECODER
A9 BTSC -DBX (STEREO/SAP) DECODER
A8 AUDIO AMPLIFIER
A12 HEADPHONE
E1 HEADPHONE
A7 CONTROL
E OR E1 SIDE AV
A12 FRONT I/O
A12 FRONT CONTROL
A4 TUNER IF
A5 VIDEO IF, SOUND IF
B CRT
A1 POWER SUPPLY
A6 SYNCHRONISATION
A2 LINE DEFLECTION
A3 FRAME DEFLECTION
Audio signal processing

Main panel (BTSC - NDBX)
copper track side

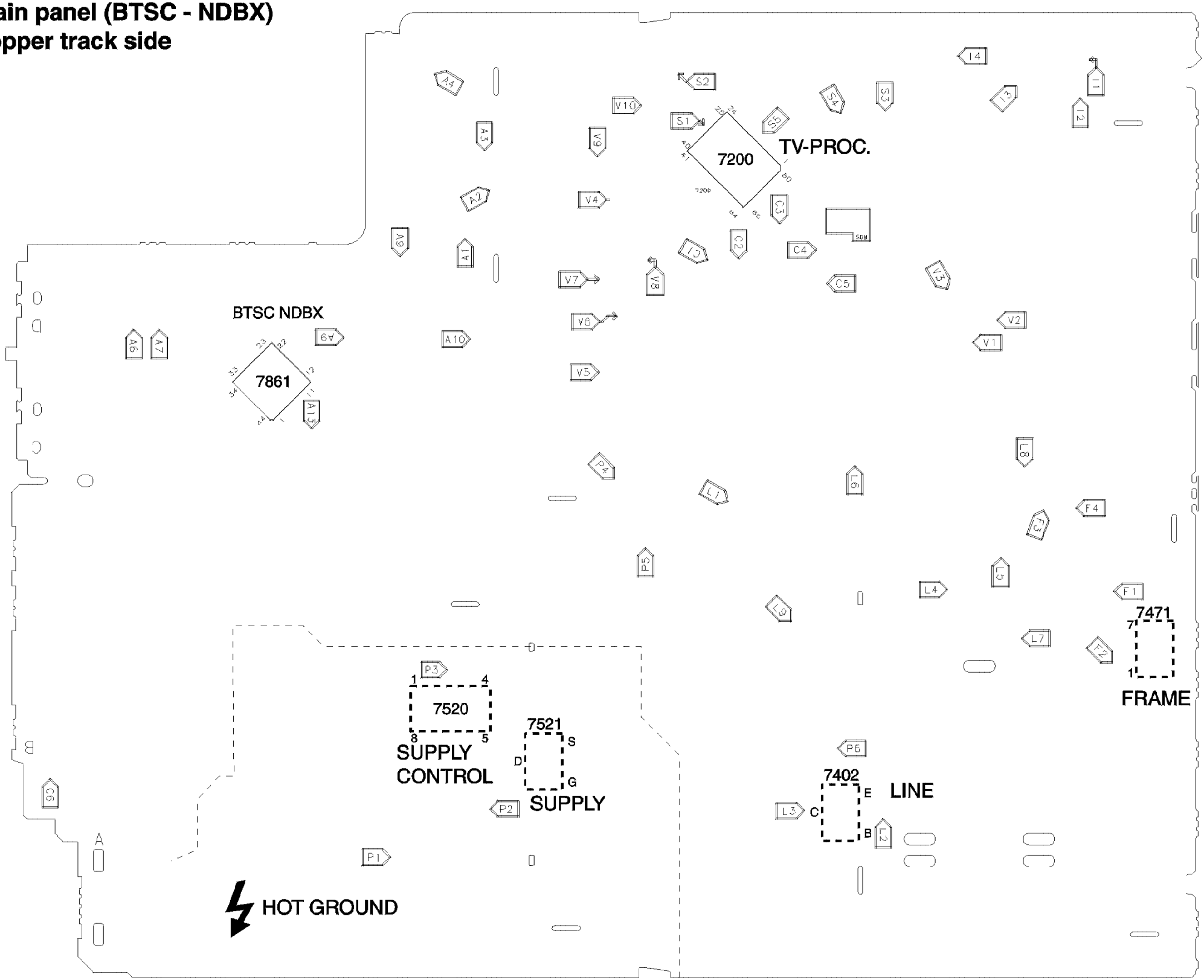

Mono set

Figure 1

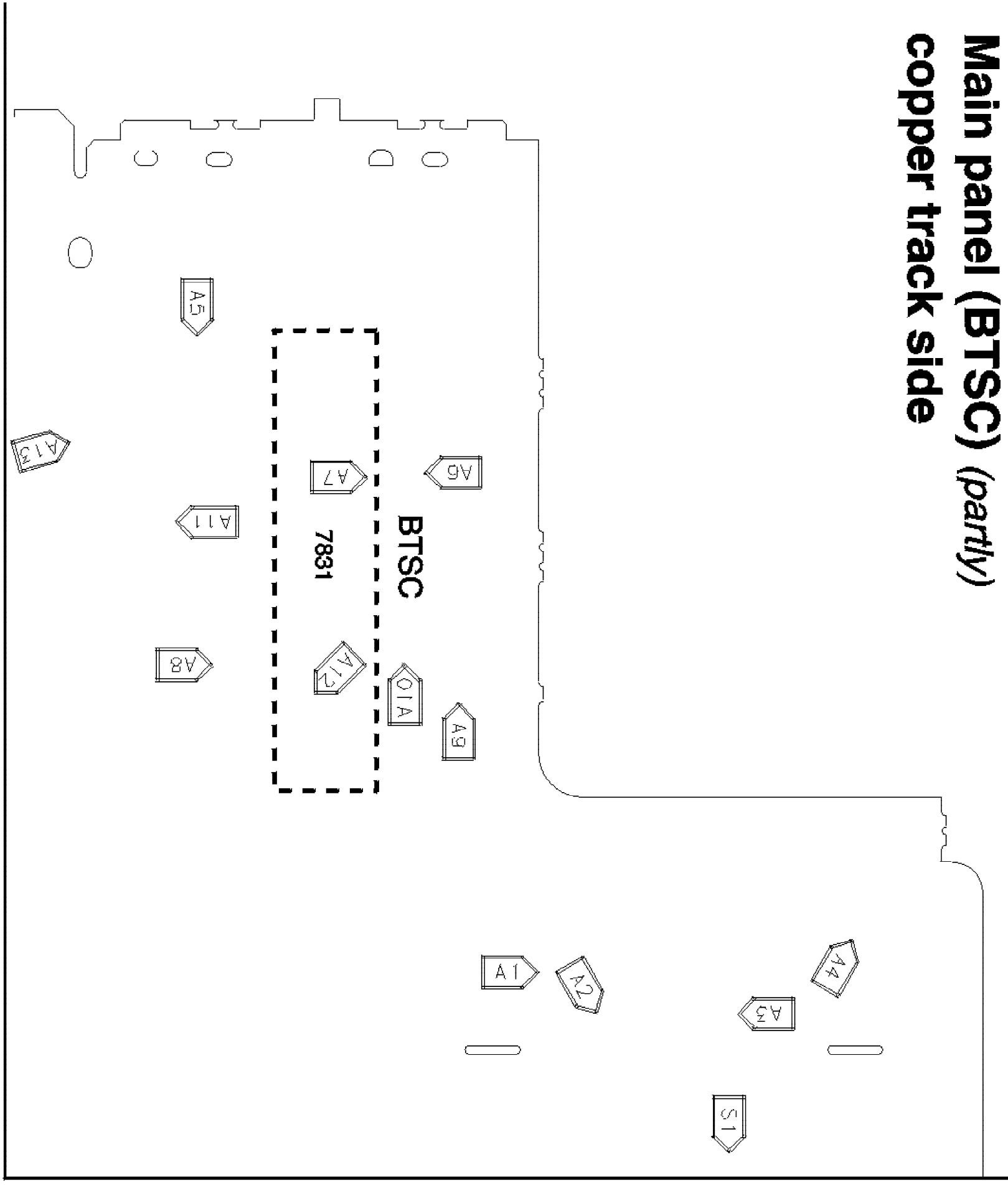
Main panel (BTSC) (partly)
copper track side
BTSC
7831
A1
A2
A3
A4
A5
A6
A7
A8
A9
A10
A11
A12
A13
S1

Figure 1

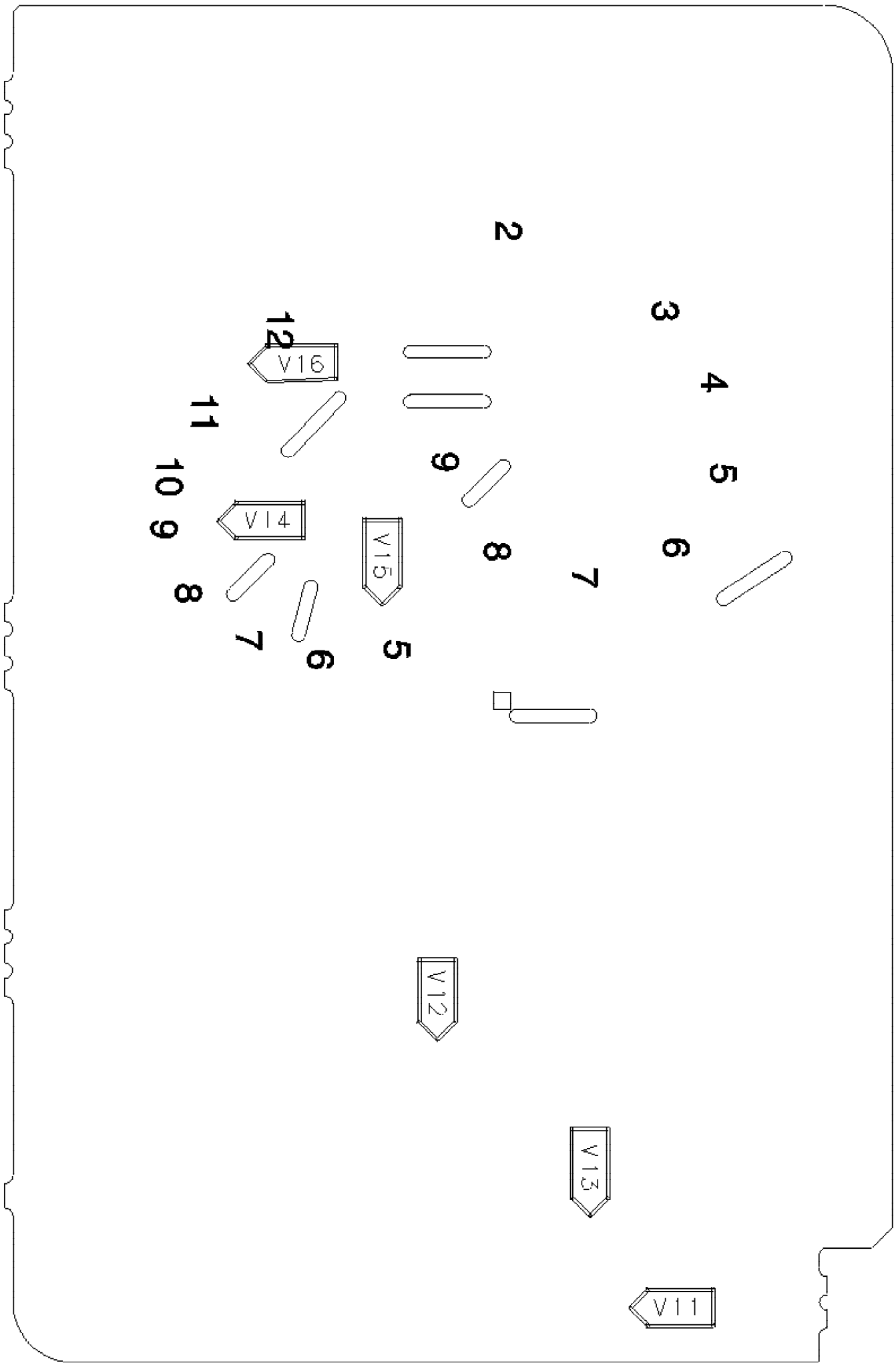
CRT panel copper track side
V16
V14
V15
V12
V13
V11
2
3
4
5
6
7
8
9
10
11
12
9
8
7
6
5

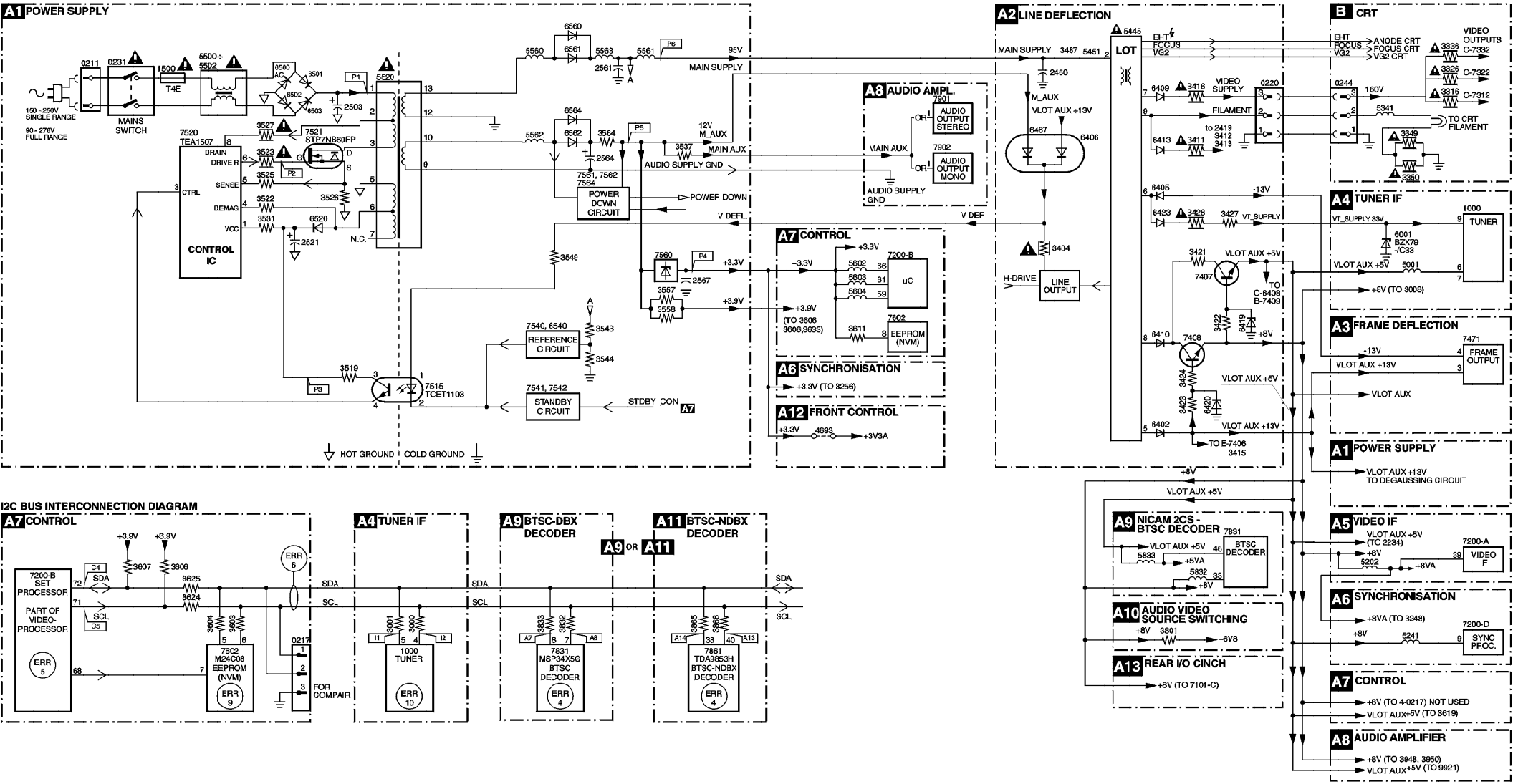
A1 POWER SUPPLY
150 - 250V SINGLE RANGE
90 - 276V FULL RANGE
MAINS SWITCH
T4E
CONTROL IC
TEA1507
STP7NB60FP
POWER DOWN CIRCUIT
REFERENCE CIRCUIT
STANDBY CIRCUIT
TCET1103
HOT GROUND
COLD GROUND
MAIN SUPPLY
95V
12V M_AUX
MAIN AUX
AUDIO SUPPLY GND
POWER DOWN
V DEFL.
STDBY_CON
A2 LINE DEFLECTION
LOT
LINE OUTPUT
H-DRIVE
VLOT AUX +13V
VIDEO SUPPLY
FILAMENT
VT_SUPPLY
VLOT AUX +5V
TO C-8408 B-7409
TO E-7406 3415
A8 AUDIO AMPL.
AUDIO OUTPUT STEREO
AUDIO OUTPUT MONO
A7 CONTROL
uC
EEPROM (NVM)
A6 SYNCHRONISATION
+3.3V (TO 3256)
A12 FRONT CONTROL
+3V3A
B CRT
ANODE CRT
FOCUS CRT
VG2 CRT
VIDEO OUTPUTS
C-7332
C-7322
C-7312
TO CRT FILAMENT
A4 TUNER IF
TUNER
VT_SUPPLY 33V
+8V (TO 3008)
A3 FRAME DEFLECTION
FRAME OUTPUT
VLOT AUX
A1 POWER SUPPLY
VLOT AUX +13V TO DEGAUSSING CIRCUIT
A9 NICAM 2CS - BTSC DECODER
BTSC DECODER
A10 AUDIO VIDEO SOURCE SWITCHING
+6V8
A13 REAR I/O CINCH
+8V (TO 7101-C)
A5 VIDEO IF
VIDEO IF
A6 SYNCHRONISATION
SYNC PROC.
A7 CONTROL
+8V (TO 4-0217) NOT USED
VLOT AUX +5V (TO 3619)
A8 AUDIO AMPLIFIER
+8V (TO 3948, 3950)
VLOT AUX +5V (TO 9921)
I2C BUS INTERCONNECTION DIAGRAM
A7 CONTROL
7200-B SET PROCESSOR
PART OF VIDEO-PROCESSOR
M24C08 EEPROM (NVM)
FOR COMPAIR
A4 TUNER IF
1000 TUNER
A9 BTSC-DBX DECODER
A9 OR A11
7831 MSP34X5G BTSC DECODER
A11 BTSC-NDBX DECODER
7861 TDA9853H BTSC-NDBX DECODER
SDA
SCL

Figure 2

Figure 3

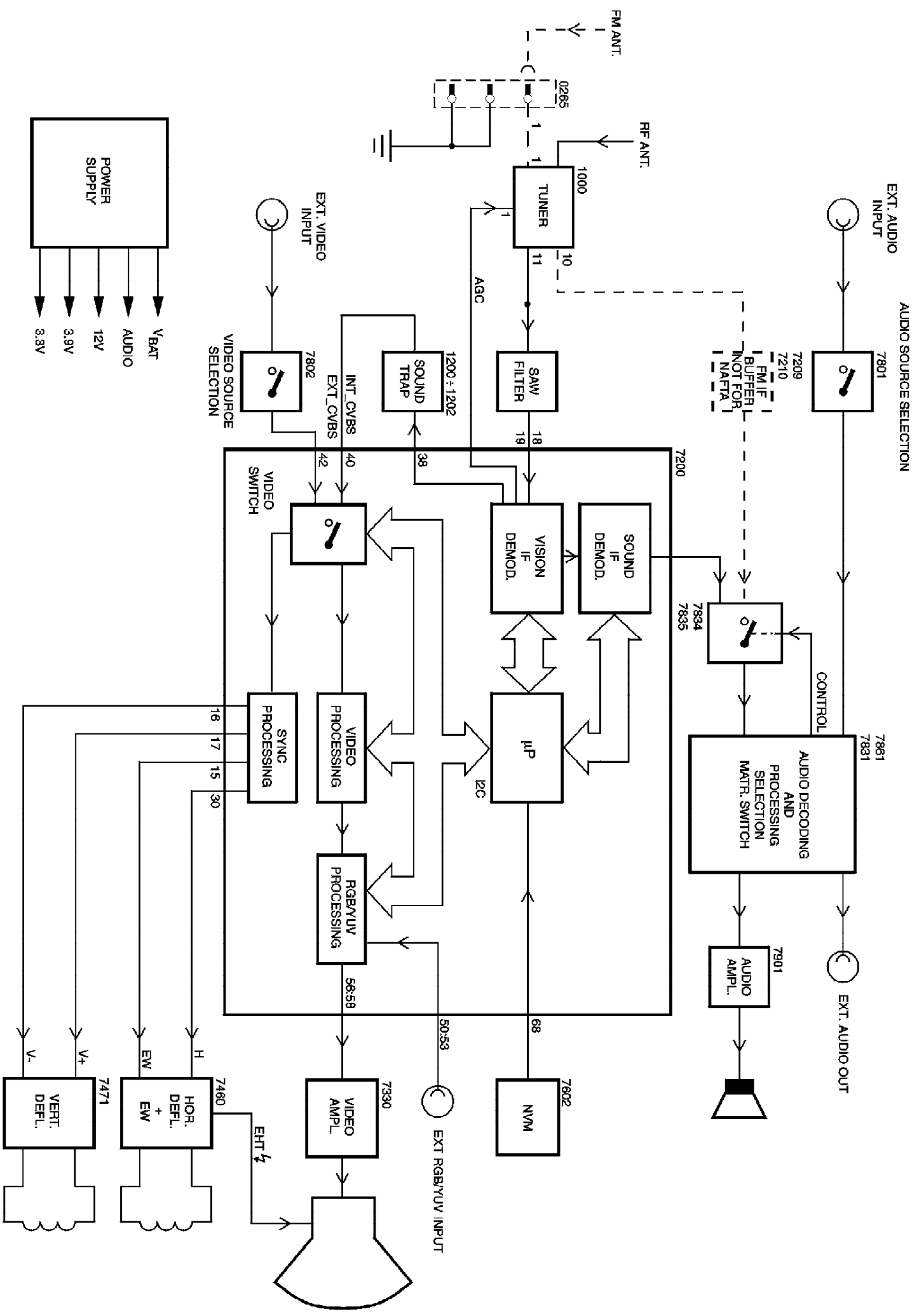
FM ANT.
0265
RF ANT.
TUNER
1000
EXT. AUDIO INPUT
AUDIO SOURCE SELECTION
7801
7209
7210
FM IF BUFFER NOT FOR NAFTA
EXT. VIDEO INPUT
AGC
SAW FILTER
SOUND TRAP
1200÷1202
7802
VIDEO SOURCE SELECTION
INT_CVBS
EXT_CVBS
7200
VIDEO SWITCH
VISION IF DEMOD.
SOUND IF DEMOD.
7834
7835
CONTROL
7861
7831
AUDIO DECODING AND PROCESSING SELECTION MATR. SWITCH
AUDIO AMPL.
7901
EXT. AUDIO OUT
POWER SUPPLY
V_{BAT}
AUDIO
12V
3.9V
3.3V
SYNC PROCESSING
VIDEO PROCESSING
µP
I2C
RGB/YUV PROCESSING
56:58
50:53
68
NVM
7602
EXT RGB/YUV INPUT
VIDEO AMPL.
7330
HOR. DEFL. + EW
7460
VERT. DEFL.
7471
EHT
V-
V+
EW
H

Basic Burst mode configuration

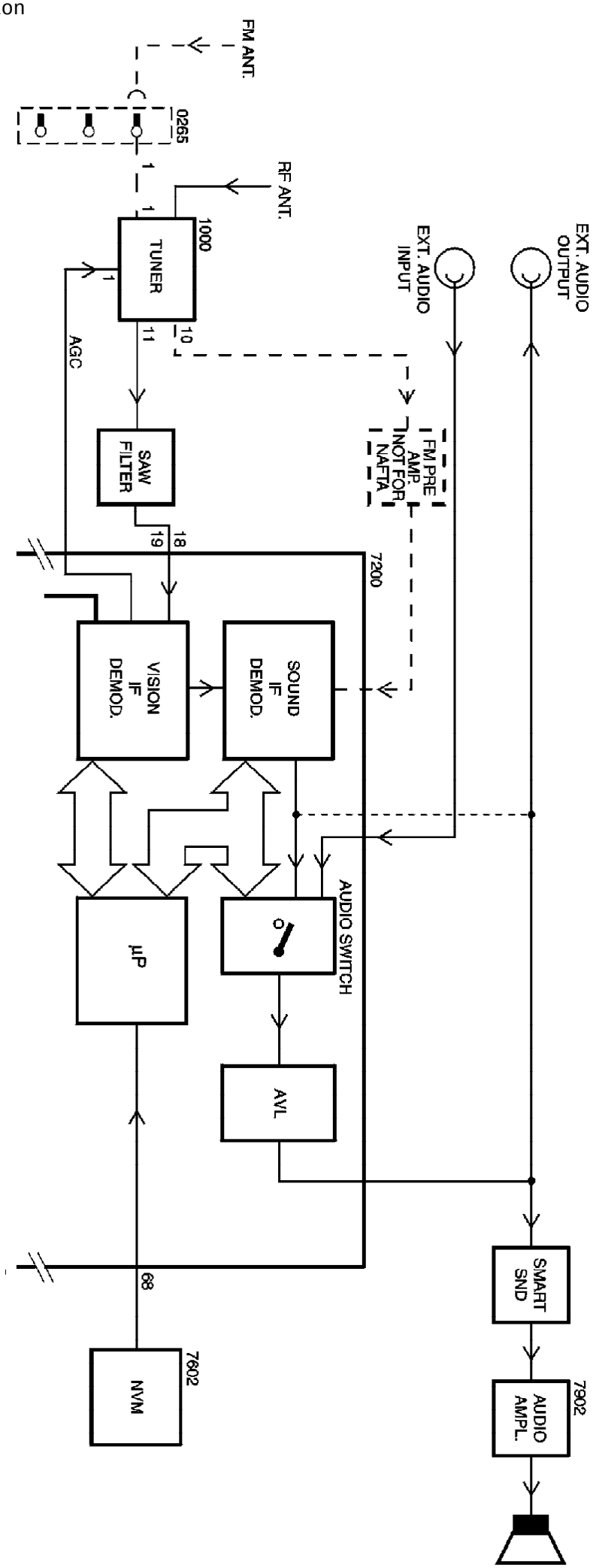

Control Diagram

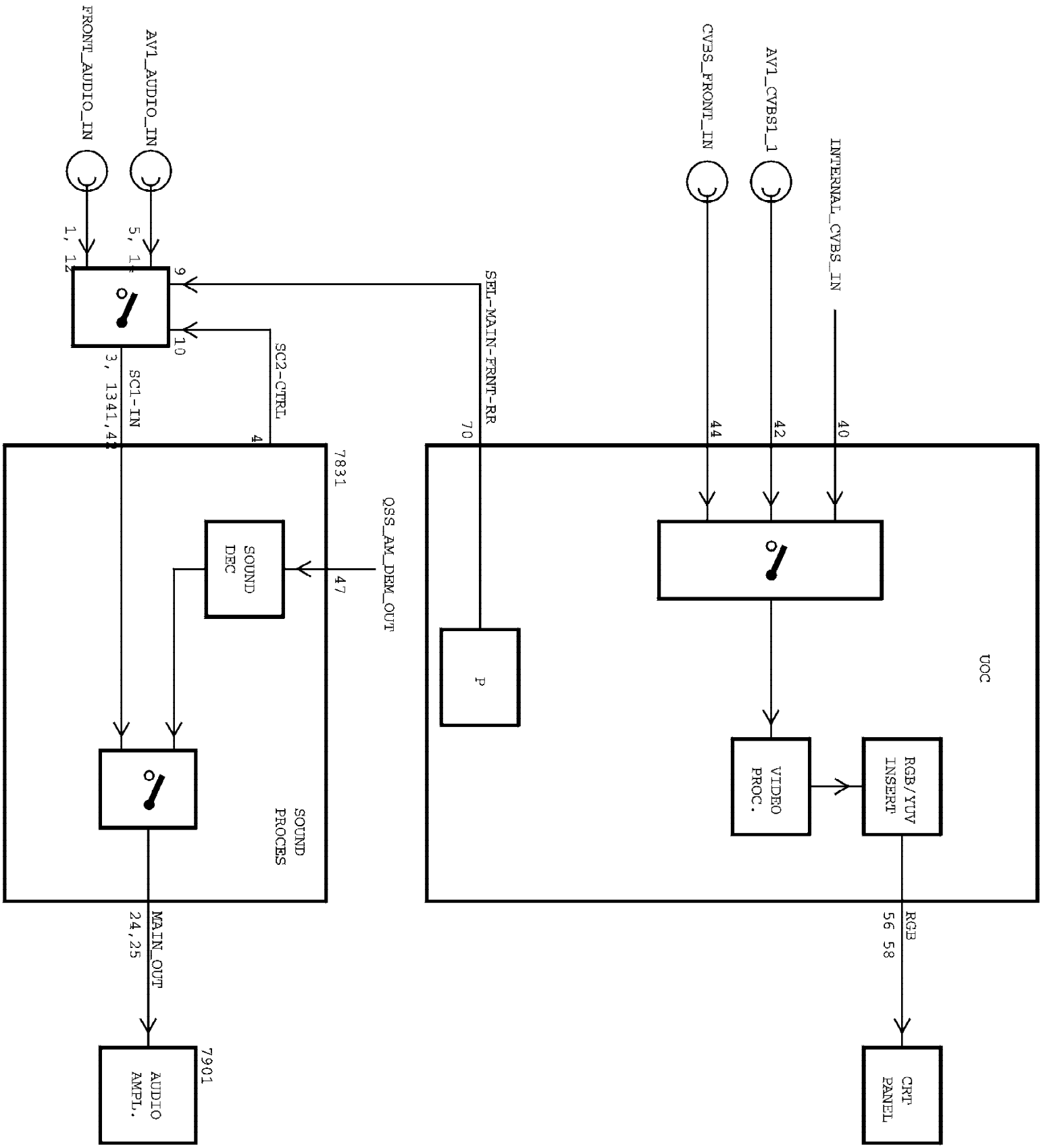

Philips Consumer Electronics

Technical Service Data

Service and Quality
Service Publications Dept.
One Philips Drive
P.O. Box 14810
Knoxville, TN 37914

Manual 7602
Model no.: 20LX200125
First Publish: 5-10-2001
Rev. Date: 10-16-2002
Print Date: 06/04/2007

Parts List

REFER TO SAFETY GUIDELINES

SAFETY NOTICE: ANY PERSON ATTEMPTING TO SERVICE THIS CHASSIS MUST FAMILIARIZE HIMSELF WITH THE CHASSIS AND BE AWARE OF THE NECESSARY SAFETY PRECAUTIONS TO BE USED WHEN SERVICING ELECTRONIC EQUIPMENT CONTAINING HIGH VOLTAGES.

CAUTION: USE A SEPARATE ISOLATION TRANSFORMER FOR THIS UNIT WHEN SERVICING

© Philips Electronics North America Corporation
Visit our World Wide Web Site at http://www.forceonline.com

Main Chassis

	Main Chassis	
0127	2 Pin Fuse Socket.	3122 358 71251
0138	IC-SPRING FOR ITEM 7471 (IC TDA9302H).	3104 301 22081
0139	IC-SPRING 7402	3139 121 24581
0211	2 Pin Connector (AC Input Plug). . . .	2422 025 16269
0212	2 Pin Connector (Degaussing Plug (RED))	2422 025 16375
0217	3 Pin Connector.	2412 020 00725
0218	2 Pin Connector.	2422 026 04637
0220	3 Pin Connector.	2422 025 04851
0221	6 Pin Connector.	2422 025 15503
0222	2 Pin Connector.	2422 025 10646
0232	Headphone Jack	2422 026 04747
0243	6 Pin Connector.	2422 025 04854
0244	3 Pin Connector.	2422 025 04851
0245	6 Pin Connector.	2422 025 04854
0246	3 Pin Connector.	2412 020 00725
0254	9 Pin CRT Socket (N-NECK).	2422 500 80067
1000	Tuner V+U PLL F ENV56D98G3	2422 542 90108
1002	45.75 MHz Saw Filter F072TPL-A	2422 549 44327
1200	4.5MHz Ceramic Filter, TPS*MB.	2422 549 40807
1500	5 Amp, 250V, Fuse (5X20)	2422 086 10905
1515	5 Amp, 12V, 1 Pin Relay, G5PA-1. . . .	2422 132 07444
1600	Tact Switch.	2422 128 02742
1601	Tact Switch.	2422 128 02742
1602	Tact Switch.	2422 128 02742
1603	Tact Switch.	2422 128 02742
1606	Tact Switch.	2422 128 02742
1660	12MHz, Crystal Resonator, HC49/U A . .	2422 543 01203
2004	0.047uF., 25V, Ceramic	3198 023 04730
2005	10uF., 20%, 50V, Electrolytic. . . .	3198 025 51090
2006	470uF., 20%, 16V, Electrolytic	3198 025 24710
2007	0.1uF, 25V, Ceramic.	3198 023 21040
2008	100uF., 20%, 25V, Electrolytic	3198 025 31010
2009	0.022uF., 50V, Ceramic	3198 017 02230
2181	22pF., 50V, Ceramic.	3198 016 02290
2182	330pF., 50V, Ceramic	3198 016 03310
2184	2.2uF., 10V, Ceramic	3198 017 22250
2202	0.1uF, 25V, Ceramic.	3198 023 21040
2203	0.1uF, 25V, Ceramic.	3198 023 21040
2204	0.1uF, 25V, Ceramic.	3198 023 21040
2205	0.22uF., 25V, Ceramic.	3198 023 22240
2208	0.1uF, 25V, Ceramic.	3198 023 21040
2209	4.7uF., 20%, 50V, Electrolytic	3198 025 54780
2210	0.47uF., 20%, 50V, Electrolytic. . . .	3198 025 54770
2211	0.47uF, 16V, Ceramic	3198 017 24740
2216	100uF., 20%, 25V, Electrolytic	3198 025 31010
2217	0.022uF., 50V, Ceramic	3198 017 02230
2219	0.22uF., 25V, Ceramic.	3198 023 22240
2226	4700pF., 50V, Ceramic.	3198 017 04720
2227	4700pF., 50V, Ceramic.	3198 017 04720
2228	820pF., 50V, Ceramic	3198 016 08210
2229	10uF., 20%, 50V, Electrolytic. . . .	3198 025 51090
2233	820pF., 50V, Ceramic	3198 016 08210
2241	4700pF., 50V, Ceramic.	3198 017 04720
2242	1uF.,16V, Ceramic.	3198 017 21050
2243	2200pF., 50V, Ceramic.	3198 017 02220
2244	0.1uF., 10%, 63V, Metalized Polyester.	2222 370 75104
2245	0.22uF., 25V, Ceramic.	3198 023 22240
2246	4.7uF., 20%, 50V, Electrolytic	3198 025 54780
2247	100uF., 20%, 25V, Electrolytic	3198 025 31010
2248	0.022uF., 50V, Ceramic	3198 017 02230
2249	0.022uF., 50V, Ceramic	3198 017 02230
2250	2.2uF., 20%, 50V, Electrolytic	3198 025 52280
2252	1000pF., 50V, Ceramic.	3198 016 01020
2253	1000pF., 50V, Ceramic.	3198 016 01020
2254	100pF., 50V, Ceramic	3198 016 01010
2313	220pF., 50V, Ceramic	3198 016 02210
2323	390pF., 50V, Ceramic	3198 016 03910
2331	390pF., 50V, Ceramic	3198 016 03910
2341	2200pF., 1kV, 10%, Ceramic	2020 558 90571
2342	0.047uF, 10%, 250V Metalized Polyester	2222 365 45473
2343	0.047uF, 10%, 250V Metalized Polyester	2222 365 45473
2401	680pF, 50V, Ceramic.	3198 019 16810
2402	0.68uF., 5%, 250V, Metalized Polypropyl ene.	2222 479 90027
2406	330pF., 50V, Ceramic	3198 016 03310
2407	0.011uF., 5%, 1.6kV, Metalized Polyprop ylene.	2222 375 90155
2408	0.022uF., 50V, Ceramic	3198 019 22230
2409	47uF., 20%, 160V, Electrolytic	2020 021 91139
2410	470uF., 20%, 16V, Electrolytic	2020 021 91577
2411	47uF., 20%, 25V, Electrolytic.	2020 021 90586
2412	0.033uF.,10%, 100V, Metalized Polyester	2222 347 90236
2413	10uF., 20%, 250V, Electrolytic	2020 012 93495
2414	1000uF., 20%, 16V, Electrolytic. . . .	2020 021 91049
2417	1000uF., 20%, 16V, Electrolytic. . . .	2020 021 91049
2418	0.01uF., 50V, Ceramic.	3198 017 01030
2419	1uF., 20%, 50V, Electrolytic	2020 021 91147
2420	1uF., 20%, 50V, Electrolytic	3198 025 51080
2421	0.047uF, 50V, Ceramic.	3198 017 24730
2422	470uF., 20%, 16V, Electrolytic	2020 021 91577
2423	10uF., 20%, 100V, Electrolytic	2020 021 90813
2471	0.1uF., 10%, 50V, Metalized Polyester.	3198 014 01040
2472	0.1uF., 10%, 50V, Metalized Polyester.	3198 014 01040
2473	100uF., 20%, 50V, Electrolytic	2020 021 90587
2475	470pF., 50V, Ceramic	3198 016 04710
2476	0.22uF., 10%, 50V, Metalized Polyester	3198 014 02240
2477	470pF., 50V, Ceramic	3198 016 04710
2500	0.47uF., 20%, 275V, Metalized Polyproyl ene.	2022 330 00018
2501	2200pF., 1kV, Ceramic.	3198 019 52220
2502	2200pF., 1kV, Ceramic.	3198 019 52220
2503	220uF, 20%, 200V, Electrolytic	2020 024 90557
2504	2200pF., 1kV, Ceramic.	3198 019 52220
2506	2200pF., 1kV, Ceramic.	3198 019 52220
2508	470pF., 1kV, 10%, Ceramic.	3198 019 64710
2515	1500pF., 250V, 20%, Ceramic.	2020 554 90172
2520	0.1uF., 16V, Ceramic	3198 017 01040
2521	22uF., 20%, 50V, Electrolytic. . . .	3198 025 52290
2522	0.1uF., 16V, Ceramic	3198 017 01040
2523	1500pF., 2kV, 10%, Ceramic	2020 558 90489
2525	470pF, 50V, Ceramic.	3198 017 04710
2526	0.001uF., 50V, Ceramic	3198 017 01020
2527	470pF, 50V, Ceramic.	3198 017 04710
2540	0.015uF., 50V, Ceramic	3198 017 01530
2560	1000pF., 1kV, 10%, Ceramic	3198 019 61020
2561	47uF., 20%, 160V, Electrolytic	2020 021 91358
2562	1000pF, 50V, Ceramic	3198 019 11020
2563	0.1uF., 10%, 50V, Metalized Polyester.	3198 014 01040
2564	2200uF., 20%, 16V, Electrolytic. . . .	2020 012 93057
2565	470pF., 1kV, 10%, Ceramic.	3198 019 64710
2567	47uF., 20%, 25V, Electrolytic. . . .	3198 025 34790
2568	1uF., 20%, 50V, Electrolytic	3198 025 51080
2569	470pF, 50V, Ceramic.	3198 017 04710
2580	47uF., 20%, 25V, Electrolytic. . . .	3198 025 34790
2601	0.22uF., 25V, Ceramic.	3198 023 22240
2602	100pF., 50V, Ceramic	3198 016 01010
2606	1000pF., 50V, Ceramic.	3198 016 01020
2607	33pF., 50V, Ceramic.	3198 016 03390
2608	0.1uF, 25V, Ceramic.	3198 023 21040
2609	33pF., 50V, Ceramic.	3198 016 03390
2611	0.1uF, 25V, Ceramic.	3198 023 21040
2612	22pF., 50V, Ceramic.	3198 016 02290
2613	22pF., 50V, Ceramic.	3198 016 02290
2615	1000pF., 50V, Ceramic.	3198 016 01020
2618	0.01uF., 50V, Ceramic.	3198 017 01030
2619	1uF.,16V, Ceramic.	3198 017 21050
2691	100uF., 20%, 25V, Electrolytic	3198 025 31010
2902	220uF., 20%, 50V, Electrolytic	3198 026 52210
2903	1uF., 20%, 50V, Electrolytic	3198 025 51080
2904	1uF.,16V, Ceramic.	3198 017 21050
2905	1000pF., 50V, Ceramic.	3198 016 01020
2908	10uF., 20%, 50V, Electrolytic. . . .	3198 025 51090
2941	1uF., 20%, 50V, Electrolytic	3198 025 51080
2942	0.033uF., 50V, Ceramic	3198 017 03330
2943	0.1uF., 16V, Ceramic	3198 017 01040
2944	0.047uF, 50V, Ceramic.	3198 017 24730
2945	0.01uF., 50V, Ceramic.	3198 017 01030
2946	1uF.,16V, Ceramic.	3198 017 21050
2981	100uF., 20%, 25V, Electrolytic	3198 025 31010
2982	470pF., 50V, Ceramic	3198 016 04710
2983	100uF., 20%, 25V, Electrolytic	3198 025 31010
2984	470pF., 50V, Ceramic	3198 016 04710
3000	100 ohm, 5%, 1/6W Carbon	3198 011 01010
3001	100 ohm, 5%, 1/6W Carbon	3198 011 01010
3002	Zero ohm "Chip" Jumper	3198 021 90020
3003	1.5k, 5%	3198 021 51520
3004	8.2k, 5%	3198 021 58220
3005	100 ohm, 5%, 1/6W Carbon	3198 011 01010
3181	75 ohm, 5%, 1/6W Carbon.	3198 011 07590
3182	100 ohm, 5%, 1/6W Carbon	3198 011 01010
3183	150 ohm, 5%, 1/6W Carbon	3198 011 01510
3184	47k, 5%.	3198 021 54730
3200	390 ohm, 5%, 1/6W Carbon	3198 011 03910
3201	100 ohm, 5%, 1/6W Carbon	3198 011 01010
3202	100 ohm, 5%, 1/6W Carbon	3198 011 01010
3203	100 ohm, 5%, 1/6W Carbon	3198 011 01010
3204	10k, 5%, 1/6W Carbon	3198 011 01030
3206	100k, 5%	3198 021 51040
3207	1k, 5%, 1/6W Carbon.	3198 011 01020
3208	220 ohm, 5%.	3198 021 52210
3209	68 ohm, 5%	3198 021 56890
3212	470 ohm, 5%.	3198 021 54710
3213	560 ohm, 5%, 1/6W Carbon	3198 011 05610
3217	330k, 5%	3198 021 53340
3218	82k, 5%.	3198 021 58230
3219	2.2k, 5%	3198 021 52220
3226	560 ohm, 5%.	3198 021 55610
3232	2.2k, 5%	3198 021 52220
3235	100 ohm, 5%, 1/6W Carbon	3198 011 01010
3241	22k, 5%.	3198 021 52230
3242	27k, 5%.	3198 021 52730
3244	820 ohm, 5%, 1/6W Carbon	3198 011 08210

S = Safety Part Be sure to use exact replacement part.

3245	39k, 5%.	3198 021 53930
3246	10k, 5%.	3198 021 51030
3247	220k, 5%	3198 021 52240
3248	27k, 5%.	3198 021 52730
3249	820 ohm, 5%, 1/6W Carbon	3198 011 08210
3251	100 ohm, 5%, 1/6W Carbon	3198 011 01010
3254	1M, 5%	3198 021 51050
3256	1k, 5%	3198 021 51020
3257	10Meg, 5%.	3198 021 51060
3258	330k, 5%	3198 021 53340
3259	470k, 5%	3198 021 54740
3311	3.9k, 5%	3198 021 53920
3312	330 ohm, 5%.	3198 021 53310
3313	10 ohm, 5%	3198 021 51090
3314	18k, 5%, Metal Film.	2322 195 63183
3316	68 ohm, 5%, Fusible Resistor NFR25	2306 204 03689
3317	1.5k, 20%, 1/2W Carbon	3198 013 01520
3321	3.9k, 5%	3198 021 53920
3322	330 ohm, 5%.	3198 021 53310
3323	10 ohm, 5%	3198 021 51090
3324	18k, 5%, Metal Film.	2322 195 63183
3326	68 ohm, 5%, Fusible Resistor NFR25	2306 204 03689
3327	1.5k, 20%, 1/2W Carbon	3198 013 01520
3331	3.9k, 5%	3198 021 53920
3332	330 ohm, 5%.	3198 021 53310
3333	10 ohm, 5%	3198 021 51090
3334	18k, 5%, Metal Film.	2322 195 63183
3336	68 ohm, 5%, Fusible Resistor NFR25	2306 204 03689
3337	1.5k, 20%, 1/2W Carbon	3198 013 01520
3341	1.5k, 20%, 1/2W Carbon	3198 013 01520
3347	220 ohm, 5% Fusible Resistor NFR25	2306 204 03221
3348	1.5k, 20%, 1/2W Carbon	3198 013 01520
3349	1 ohm, 5%, Fusible Resistor NFR25.	2306 204 03108
3350	1 ohm, 5%, Fusible Resistor NFR25.	2306 204 03108
3401	330k, 5%	2322 242 13334
3402	18k, 5%, 1/6W Carbon	3198 011 01830
3403	22 ohm, 5%, 3W, Power Resistor	3198 012 32290
3404	6.8 ohm, 5%, Fusible Resistor NFR25.	2306 204 03688
3406	10k, 5%, 1/6W Carbon	3198 011 01030
3407	220 ohm, 5%, 3W, Power Resistor.	3198 012 32210
3408	1k, 5%, 1/6W Carbon.	3198 011 01020
3410	33k, 5%.	3198 021 53330
3411	10 ohm, 5% Fusible Resistor NFR25.	2306 204 03109
3412	3.3k, 1%, Metal Film	2322 156 23302
3413	10k, 5%.	3198 021 51030
3414	1.5k, 1%, Metal Film	2322 156 21502
3415	1k, 5%, 1/6W Carbon.	3198 011 01020
3416	68 ohm, 5%, Fusible Resistor NFR25	2306 204 03689
3417	33k, 5%, 1/6W Carbon	3198 011 03330
3418	33k, 5%.	3198 021 53330
3419	6.8k, 5%	3198 021 56820
3420	33k, 5%.	3198 021 53330
3421	6.8 ohm, 5%, 2W, Power Resistor.	3198 012 26880
3422	100 ohm, 5%.	3198 021 51010
3423	820 ohm, 5%.	3198 021 58210
3424	100 ohm, 5%, 1/6W Carbon	3198 011 01010
3425	12k, 5%, 1/6W Carbon	3198 011 01230
3426	1M, 5%	3198 021 51050
3427	12k, 5%, 1/6W Carbon	3198 011 01230
3428	39 ohm, 5% Fusible Resistor NFR25H	2306 207 03399
3431	2.2k, 5%	3198 021 52220
3432	22 ohm, 5%, 1/6W Carbon.	3198 011 02290
3471	3.9 ohm, 1%, Metal Film.	2322 156 23908
3472	3.9 ohm, 1%, Metal Film.	2322 156 23908
3473	2.2k, 1%, Metal Film	2322 156 22202
3474	1k, 5%, 1/6W Carbon.	3198 011 01020
3475	2.2k, 1%, Metal Film	2322 156 22202
3476	1.5 ohm, 5%, Fusible Resistor NFR25.	2306 204 03158
3477	220 ohm, 5%, 1/6W Carbon	3198 011 02210
3478	220 ohm, 5%, 1/6W Carbon	3198 011 02210
3479	1k, 5%, 1/6W Carbon.	3198 011 01020
3500	3.3Meg, 5%	2322 242 13335
3501	3.3Meg, 5%	2322 242 13335
3502	4.7 ohm, 20%, 3.1W, Negative Temperature Coefficient.	2122 612 00055
3503	10 ohm, 30%, 120V, Positive Temperature Coefficient.	2120 661 00026
3506	Jumper Wire.	0322 179 00003
3507	Surge Protector DSP-301N-A21F.	2422 549 43073
3508	1.5Meg, 5%	2322 242 13155
3519	270 ohm, 5%, 1/6W Carbon	3198 011 02710
3520	1.2k, 5%	3198 021 51220
3521	4.7 ohm, 5%, 1/6W Carbon	3198 011 04780
3522	330k, 5%	3198 021 53340
3523	100 ohm, 5%, Fusible Resistor NFR25	2306 204 03101
3524	56k, 5%.	3198 021 55630
3525	1k, 5%	3198 021 51020
3526	0.15 ohm, 5%, 1W, Power Resistor	3198 012 11570
3527	2.2k ohm, 5%, Fusible Resistor NFR25	2306 204 03222
3528	10k, 5%.	3198 021 51030
3529	47k, 5%.	3198 021 54730
3530	4.7k, 5%	3198 021 54720
3531	Zero ohm "Chip" Jumper	3198 021 90020
3541	470 ohm, 5%.	3198 021 54710
3542	1.5k, 5%	3198 021 51520
3543	82k, 1%, Metal Film.	2322 156 28203
3544	6.8k, 1%, Metal Film	2322 156 26802
3545	82k, 5%.	3198 021 58230
3546	Zero ohm "Chip" Jumper	3198 021 90020
3547	0.33 ohm, 5%, 1W, Power Resistor	3198 012 13370
3548	8.2k, 5%	3198 021 58220
3549	470 ohm, 5%, 1/6W Carbon	3198 011 04710
3552	10k, 5%.	3198 021 51030
3559	1k, 5%	3198 021 51020
3561	220 ohm, 5%, 1/6W Carbon	3198 011 02210
3562	10k, 5%.	3198 021 51030
3563	4.7k, 5%	3198 021 54720
3564	4.7 ohm, 5%, 2W, Power Resistor.	3198 012 24780
3565	330 ohm, 5%, 1W, Power Resistor.	3198 012 13310
3566	2.2k, 5%	3198 021 52220
3569	5.6k, 5%	3198 021 55620
3580	47k, 5%.	3198 021 54730
3603	100 ohm, 5%, 1/6W Carbon	3198 011 01010
3604	100 ohm, 5%, 1/6W Carbon	3198 011 01010
3605	4.7k, 5%	3198 021 54720
3606	2.2k, 5%, 1/6W Carbon.	3198 011 02220
3607	2.2k, 5%, 1/6W Carbon.	3198 011 02220
3608	100 ohm, 5%, 1/6W Carbon	3198 011 01010
3611	100 ohm, 5%.	3198 021 51010
3614	4.7k, 5%, 1/6W Carbon.	3198 011 04720
3615	10k, 5%, 1/6W Carbon	3198 011 01030
3617	4.7k, 5%, 1/6W Carbon.	3198 011 04720
3618	2.2k, 5%, 1/6W Carbon.	3198 011 02220
3619	8.2k, 5%, 1/6W Carbon.	3198 011 08220
3622	100 ohm, 5%.	3198 021 51010
3623	4.7k, 5%	3198 021 54720
3624	100 ohm, 5%, 1/6W Carbon	3198 011 01010
3625	100 ohm, 5%, 1/6W Carbon	3198 011 01010
3626	4.7k, 5%	3198 021 54720
3627	4.7k, 5%	3198 021 54720
3628	10k, 5%.	3198 021 51030
3630	2.2k, 5%	3198 021 52220
3632	Zero ohm "Chip" Jumper	3198 021 90020
3636	100 ohm, 5%.	3198 021 51010
3681	390 ohm, 5%.	3198 021 53910
3682	3.3k, 5%	3198 021 53320
3683	390 ohm, 5%.	3198 021 53910
3684	560 ohm, 5%.	3198 021 55610
3685	560 ohm, 5%.	3198 021 55610
3686	1.5k, 5%	3198 021 51520
3691	330 ohm, 5%.	3198 021 53310
3693	220 ohm, 5%.	3198 021 52210
3694	4.7k, 5%	3198 021 54720
3901	1k, 5%	3198 021 51020
3902	3.3k, 5%	3198 021 53320
3903	8.2k, 5%	3198 021 58220
3904	10k, 5%.	3198 021 51030
3907	5.6k, 5%	3198 021 55620
3941	100 ohm, 5%.	3198 021 51010
3942	3.9k, 5%	3198 021 53920
3943	2.7k, 5%	3198 021 52720
3944	2.7k, 5%	3198 021 52720
3945	1k, 5%	3198 021 51020
3946	18k, 5%.	3198 021 51830
3947	330 ohm, 5%.	3198 021 53310
3948	47k, 5%.	3198 021 54730
3949	15k, 5%.	3198 021 51530
3950	560 ohm, 5%.	3198 021 55610
3951	390 ohm, 5%.	3198 021 53910
3981	120 ohm, 5%, 1/6W Carbon	3198 011 01210
3982	120 ohm, 5%, 1/6W Carbon	3198 011 01210
4001	Zero ohm "Chip" Jumper	3198 021 90020
4002	Zero ohm "Chip" Jumper	3198 021 90020
4181	Zero ohm "Chip" Jumper	3198 021 90020
4212	Zero ohm "Chip" Jumper	3198 021 90020
4216	Zero ohm "Chip" Jumper	3198 021 90020
4217	Zero ohm "Chip" Jumper	3198 021 90020
4410	Zero ohm "Chip" Jumper	3198 021 90020
4501	Zero ohm "Chip" Jumper	3198 021 90020
4601	Zero ohm "Chip" Jumper	3198 021 90020
4613	Zero ohm "Chip" Jumper	3198 021 90020
4614	Zero ohm "Chip" Jumper	3198 021 90020
4615	Zero ohm "Chip" Jumper	3198 021 90020
4616	Zero ohm "Chip" Jumper	3198 021 90020
4617	Zero ohm "Chip" Jumper	3198 021 90020
4618	Zero ohm "Chip" Jumper	3198 021 90020
4619	Zero ohm "Chip" Jumper	3198 021 90020
4622	Zero ohm "Chip" Jumper	3198 021 90020
4623	Zero ohm "Chip" Jumper	3198 021 90020
4691	Zero ohm "Chip" Jumper	3198 021 90020
4692	Zero ohm "Chip" Jumper	3198 021 90020
4693	Zero ohm "Chip" Jumper	3198 021 90020
4807	Zero ohm "Chip" Jumper	3198 021 90020
4811	Zero ohm "Chip" Jumper	3198 021 90020

S = Safety Part Be sure to use exact replacement part.

4812	Zero ohm "Chip" Jumper	3198 021 90020
4813	Zero ohm "Chip" Jumper	3198 021 90020
4814	Zero ohm "Chip" Jumper	3198 021 90020
4901	Zero ohm "Chip" Jumper	3198 021 90020
4911	Zero ohm "Chip" Jumper	3198 021 90020
4982	Zero ohm "Chip" Jumper	3198 021 90020
5001	Fixed Inductor, 5.6uH, 10%	3198 018 25680
5002	Fixed Inductor, 0.82uH, 10%.	3198 018 18270
5201	Fixed Inductor, 6.8uH, 5%.	3198 018 16880
5202	Fixed Inductor, 10uH, 10%.	3198 018 21090
5241	Fixed Inductor, 10uH, 10%.	3198 018 21090
5242	Fixed Inductor, 10uH, 5%	3198 018 11090
5341	Fixed Inductor, 12uH, 5% SPT0508	2422 535 95598
5342	Fixed Inductor Bead, 100MHz.	3198 018 90010
5403	Fixed Inductor, 33uH, 10% LHL08	2422 535 94643
5408	Fixed Inductor, 27uH, 5% SPT0508	2422 535 95366
5410	Fixed Inductor, 27uH, 5% SPT0508	2422 535 95366
5444	Signal Driver Transformer SC10009-03.	2422 531 02446
5445	LOT Transformer MSLOT4	3128 138 21541
5502	AC Filter.	2422 549 44284
5520	Transformer SS28011-04.	2422 531 02458
5520	Transformer SS28032-01A	2422 531 02458
5521	Fixed Inductor Bead, 100MHz.	3198 018 90010
5560	Fixed Inductor Bead, 100MHz.	3198 018 90010
5561	Fixed Inductor, 27uH, 10%.	3198 018 22790
5562	Fixed Inductor Bead, 100MHz.	3198 018 90010
5563	Fixed Inductor Bead, 100MHz.	3198 018 90010
5602	Fixed Inductor, 5.6uH, 5%.	3198 018 15680
5603	Fixed Inductor, 5.6uH, 5%.	3198 018 15680
5604	Fixed Inductor, 5.6uH, 5%.	3198 018 15680
5833	Jumper Wire.	0322 179 00003
6001	Diode Regulator, BZX79-C33 (33Volt).	3198 010 23390
6201	Diode, BAV21	3198 010 10630
6202	Diode, BAS316	3198 010 10630
6206	Diode Regulator, BZX384-C6V8 (6.8Volt)	3198 020 56880
6241	Diode Regulator, BZX384-C6V8 (6.8Volt)	3198 020 56880
6311	Diode, BAV21	3198 010 10070
6321	Diode, BAV21	3198 010 10070
6331	Diode, BAV21	3198 010 10070
6341	Diode, BAV21	3198 010 10070
6342	Diode, 1N4148.	3198 010 10010
6343	Diode Regulator, BZX384-C8V2 (8.2Volt)	3198 020 58280
6401	Diode, BAV21	3198 010 10070
6402	Diode Rectifier, BYV27-200	9322 126 72673
6404	Diode Rectifier, BYD33D.	9337 410 30133
6405	Diode Rectifier, BYD33D.	9337 234 00133
6406	Diode, BAV70.	9331 849 10215
6407	Diode, BAS316	3198 010 10630
6408	Diode, BAS316	3198 010 10630
6409	Diode Rectifier, BYD33D.	9337 234 00133
6410	Diode Rectifier, BYD33D.	9337 234 00133
6413	Diode, 1N4148.	3198 010 10010
6414	Diode Regulator, BZX79-B6V2 (6.2Volt)	9331 668 30133
6415	Diode, BAS316	3198 010 10630
6419	Diode Regulator, BZX79-C5V6 (5.6Volt).	3198 010 25680
6420	Diode Regulator, BZX79-C9V1 (9.1Volt).	9331 177 80133
6423	Diode Rectifier, BYD33D.	9337 234 00133
6471	Diode Rectifier, BYD33D.	9337 234 00133
6500	Diode Rectifier, 1N5062.	3198 010 10120
6501	Diode Rectifier, 1N5062.	3198 010 10120
6502	Diode Rectifier, 1N5062.	3198 010 10120
6503	Diode Rectifier, 1N5062.	3198 010 10120
6520	Diode Rectifier, BYD33D.	9337 234 00133
6523	Diode, 1N4148.	3198 010 10010
6540	Diode Regulator, BZX79-B6V2 (6.2Volt)	9331 668 30133
6541	Diode Regulator, BZX79-C10 (10Volt).	3198 010 21090
6560	Diode Rectifier, BYW76-RAS15/10.	9322 127 32682
6561	Diode Rectifier, BYW76-RAS15/10.	9322 127 32682
6562	Diode Rectifier, EGP20DL-5100.	9322 164 42682
6563	Diode, BAS316	3198 010 10630
6565	Diode, BAV70.	9331 849 10215
6566	Diode, BAS316	3198 010 10630
6569	Diode, BAS316	3198 010 10630
6570	Diode Regulator, BZX384-C6V8 (6.8Volt)	3198 020 56880
6580	Diode, BAS316	3198 010 10630
6581	Diode, BAS316	3198 010 10630
6681	Diode, BAT85	9336 247 60133
6691	LED, VS LTL-10224WHCR.	9322 050 99682
6692	IR Receiver, TSOP1836UH3V.	9322 127 54667
6901	Diode, BAS316	3198 010 10630
7200	IC, 2US1 Software Cluster.	9352 699 88557
7201	Transistor BC847B	3198 010 42030
7204	Transistor BC857B	3198 010 42150
7241	Transistor PDTA114ET.	3198 010 44010
7311	Transistor BF422	3198 020 43010
7312	Transistor BF422	3198 020 43010
7313	Transistor BF423	3198 020 43020
7321	Transistor BF422	3198 020 43010
7322	Transistor BF422	3198 020 43010
7323	Transistor BF423	3198 020 43020
7331	Transistor BF422	3198 020 43010
7332	Transistor BF422	3198 020 43010
7333	Transistor BF423	3198 020 43020
7401	Transistor PDTC143ZT.	9340 547 00215
7402	Power Transistor BUT11APX-1200	9340 563 21127
7403	Transistor BC337-25.	3198 020 43530
7404	Transistor BC636	9332 219 50126
7405	Transistor BC857B	3198 010 42150
7406	Transistor BC857B	3198 010 42150
7407	Power Transistor BD135-16.	3198 020 41190
7408	Power Transistor BD135-17.	3198 020 41190
7409	Transistor BC857B	3198 010 42150
7471	IC, TDA9302H	9322 088 25682
7515	Opto-Coupler, TCET1103(G).	9322 140 14667
7520	IC, TEA1507P/N1.	9352 673 56112
7521	Power FET, STP5NC50FP.	9322 160 71687
7522	Transistor BC847B	3198 010 42030
7540	Transistor BC547B.	3198 020 40030
7541	Transistor PDTC114ET.	9340 310 10215
7542	Transistor BC857B	3198 010 42150
7560	IC, L78L33ACZ.	9322 134 92676
7561	Transistor PDTC143ZT.	9340 547 00215
7580	Transistor BC857B	3198 010 42150
7602	IC M24C16-WBN6	9322 147 25682
7902	IC, AN7523N.	9322 158 66667
7941	Transistor BC847B	3198 010 42030
7942	Transistor BC847B	3198 010 42030
7943	Transistor BC847B	3198 010 42030
9181	Jumper Wire.	0322 179 00003
9692	Jumper Wire.	0322 179 00003
9696	Jumper Wire.	0322 179 00003
9814	Jumper Wire.	0322 179 00003
9820	Jumper Wire.	0322 179 00003
9821	Jumper Wire.	0322 179 00003
9822	Jumper Wire.	0322 179 00003
9824	Jumper Wire.	0322 179 00003
9825	Jumper Wire.	0322 179 00003
9826	Jumper Wire.	0322 179 00003
9827	Jumper Wire.	0322 179 00003
9828	Jumper Wire.	0322 179 00003
9829	Jumper Wire.	0322 179 00003
9830	Jumper Wire.	0322 179 00003
9832	Jumper Wire.	0322 179 00003
9833	Jumper Wire.	0322 179 00003
9982	Jumper Wire.	0322 179 00003
CBA	Main Chassis	3139 178 86291

Model 20LX200/125 Cabinet Parts

	Model 20LX200/125 Cabinet Parts	
S AC01	AC Power Cord.	3135 010 04771
AC03	Cabinet Back	3139 124 36351
AC04	Cabinet Front.	3139 137 82051
AC05	Chassis Guide.	3139 124 37561
AC06	Control Buttons.	3139 124 36341
S AC08	CRT A48KRD89X04.	9322 139 63682
S AC09	Deguassing Coil.	2422 549 44428
AC10	Deguassing Coil Holder	3135 013 01641
AC11	Light Guide.	3139 124 36271
AC13	Owner's Manual	3121 235 20181
AC14	Power Button	3139 124 34271
AC15	Remote Transmitter	3139 228 86461
AC16	Speaker, 8W, 16 ohm.	2422 264 00407
S AC18	ITC = Integrated Tube Component, CRT & Yoke Pre-Set	0000 000 00ITC
AC21	Batteries f Remote Transmitter	9299 000 65263
AC24	Degaussing Coil Spring	3139 121 26231
AC32	Assembly Braid	3135 010 07321

S = Safety Part Be sure to use exact replacement part.

Philips Consumer Electronics

Technical Service Data

Service and Quality
Service Publications Dept.
One Philips Drive
P.O. Box 14810
Knoxville, TN 37914

Manual 7602
Model no.: 20LX200125
First Publish: 5-10-2001
Rev. Date: 10-16-2002
Print Date: 06/04/2007

Scope Patterns

REFER TO SAFETY GUIDELINES

SAFETY NOTICE: ANY PERSON ATTEMPTING TO SERVICE THIS CHASSIS MUST FAMILIARIZE HIMSELF WITH THE CHASSIS AND BE AWARE OF THE NECESSARY SAFETY PRECAUTIONS TO BE USED WHEN SERVICING ELECTRONIC EQUIPMENT CONTAINING HIGH VOLTAGES.

CAUTION: USE A SEPARATE ISOLATION TRANSFORMER FOR THIS UNIT WHEN SERVICING

© Philips Electronics North America Corporation
Visit our World Wide Web Site at http://www.forceonline.com

P1

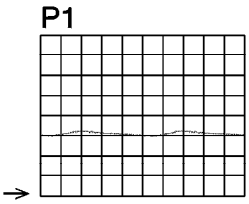

P2

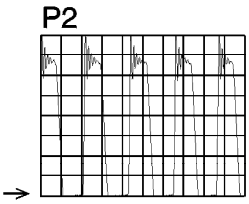

P3

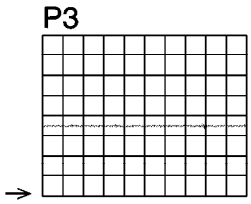

P4

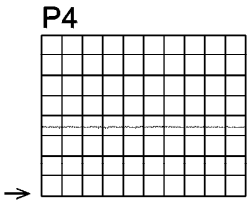

P5

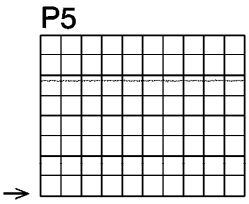

P6

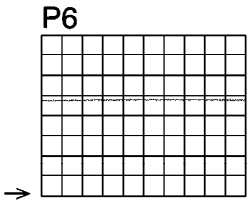

L1

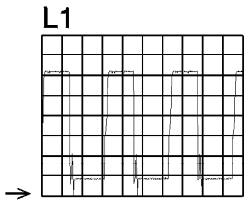

L2

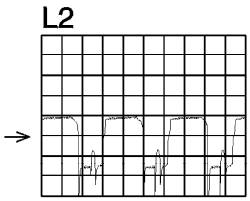

L4

L4 = 12V4

L5

L5 = 5V

L6

L6 = 8V

L7

L7 = -13V

L8

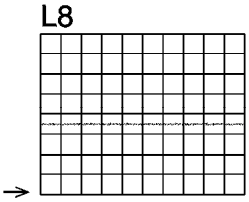

L9

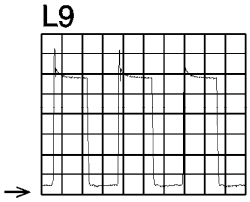

L10

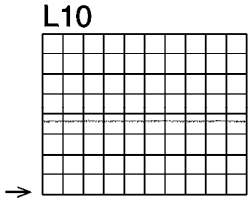

F1

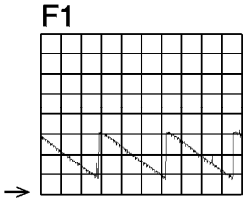

F2

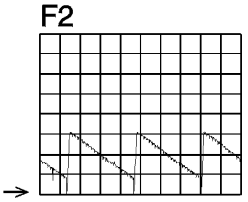

F3

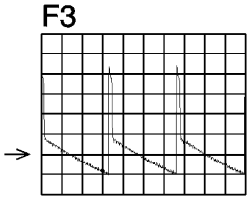

F4

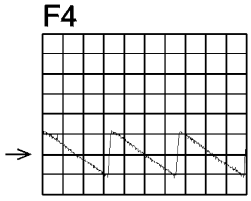

F5

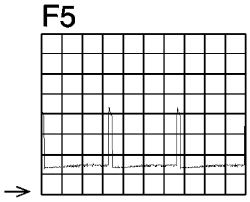

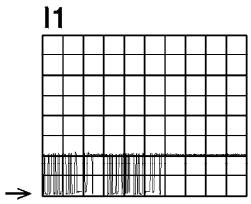

2V / div DC
200us / div
I1

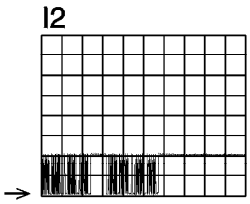

2V / div DC
200us / div
I2

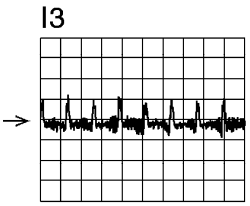

20mV / div DC
50us / div
I3

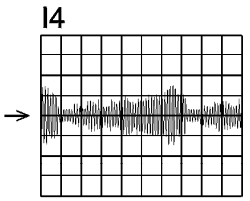

200mV / div DC
10us / div
I4

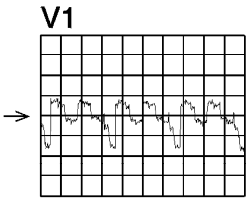

20mV / div DC
20us / div
V1

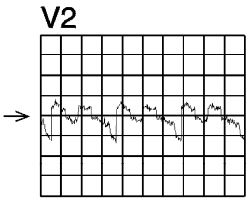

20mV / div DC
20us / div
V2

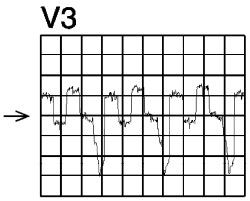

20mV / div DC
20us / div
V3

V4 = 0V
V4

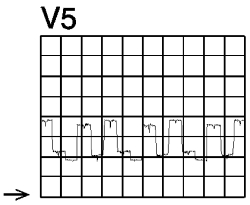

1V / div DC
20us / div
V5

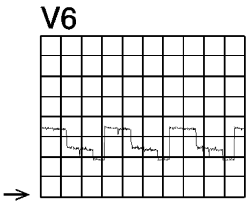

1V / div DC
20us / div
V6

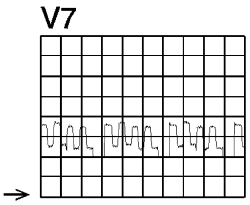

1V / div DC
20us / div
V7

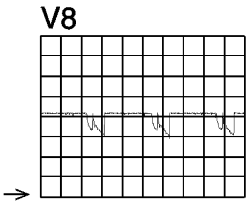

2V / div DC
20us / div
V8

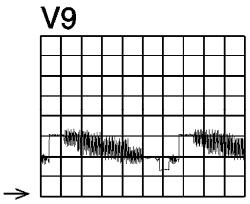

500mV / div DC
10us / div
V9

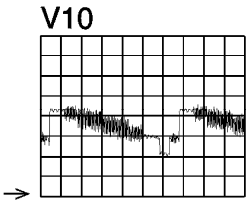

1V / div DC
10us / div
V10

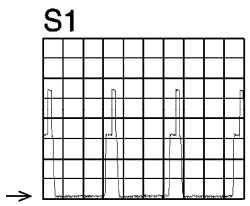

1V / div DC
20us / div
S1

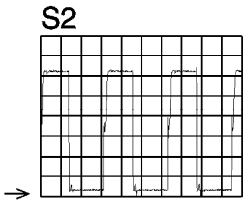

500mV / div DC
20us / div
S2

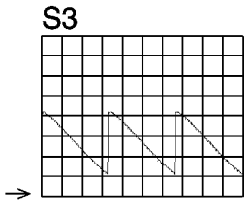

500mV / div DC
5ms / div
S3

500mV / div DC
5ms / div
S4

S5 = 0V
S5

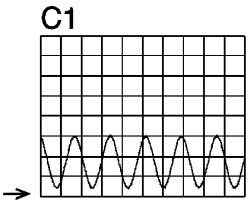

1V / div DC
1ms / div
C1

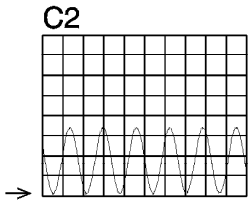

C2

C3 = 0V
C3

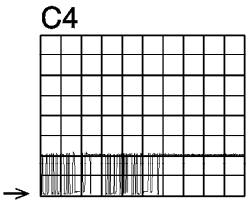

C4

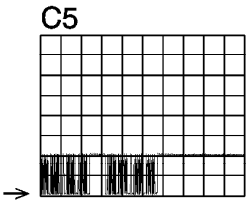

C5

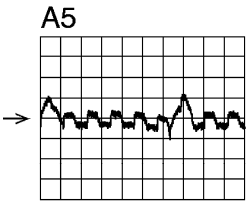

A5

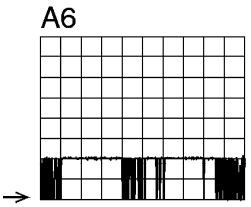

A6

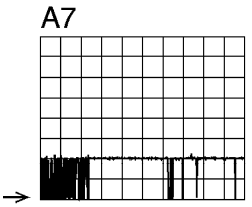

A7

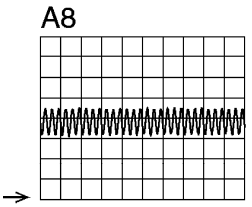

A8

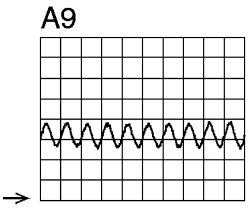

A9

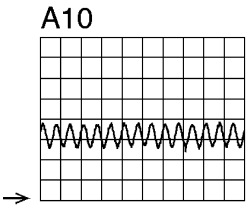

A10

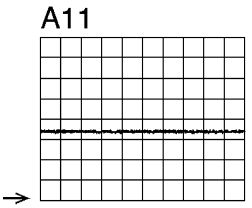

A11

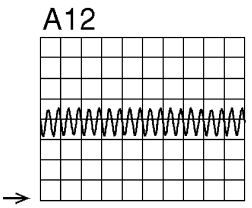

A12

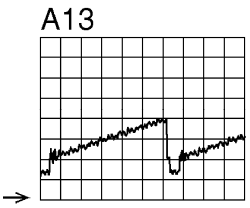

A13

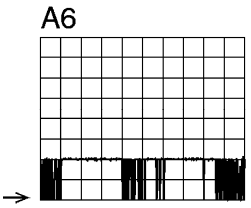

A6

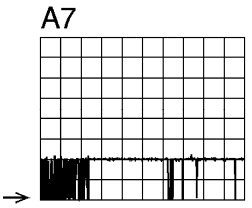

A7

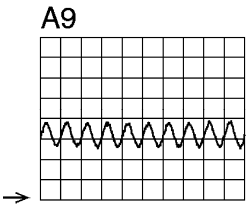

A9

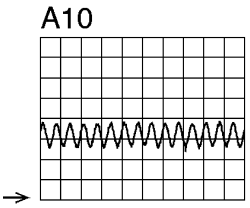

A10

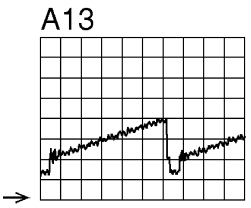

A13

C6 = 0V
C6

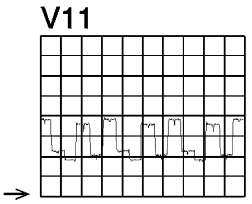

V11

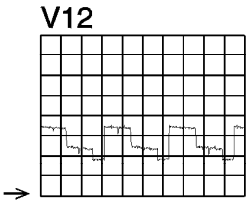

V12

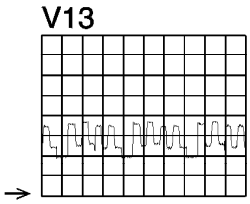

V13

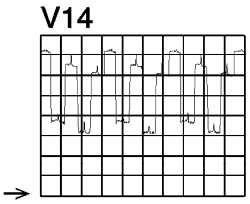

V14

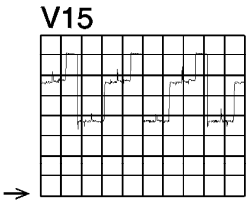

V15

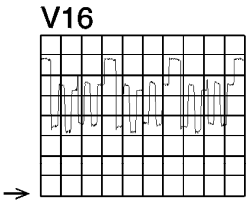

V16

L8 Chassis, Manual 7602

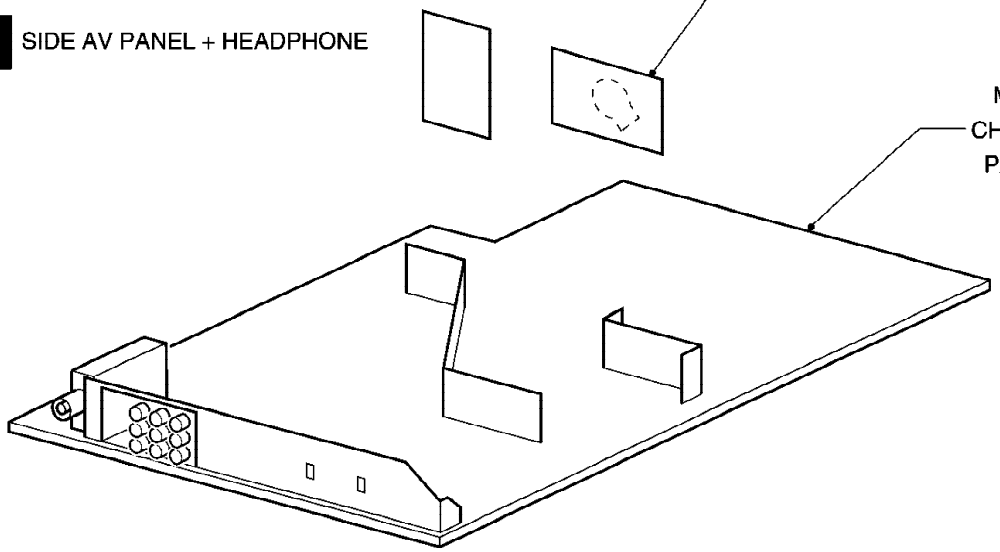

CRT PANEL **B**

C SIDE AV PANEL + HEADPHONE

MAIN CHASSIS PANEL

- POWER SUPPLY **A1**
- LINE DEFLECTION **A2**
- FRAME DEFLECTION **A3**
- TUNER IF **A4**
- VIDEO + SOUND IF **A5**
- SYNCHRONISATION **A6**
- CONTROL **A7**
- AUDIO AMPLIFIER **A8**
- BTSC DECODER **A9** **A11**
- A/V SWITCHING **A10**
- HEADPHONE + FR. CONTROL **A12**
- REAR I/O CINCH **A13**

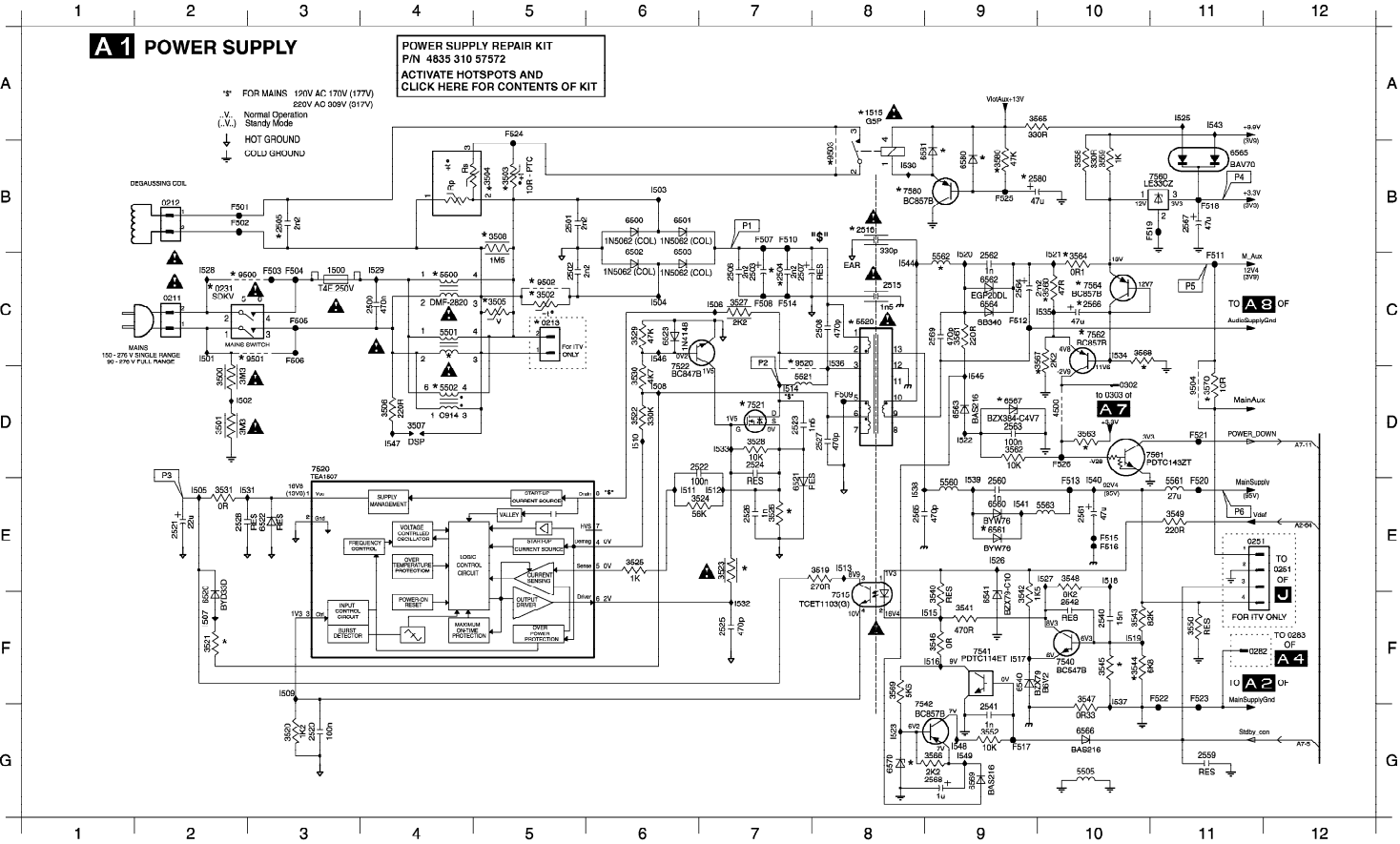

0211 C2 3563 D10 F524 A5
0212 B2 3564 C10 F525 B9
0213 C5 3565 A10 F526 D10
0231 C2 3566 C9 I501 C2
0251 E11 3567 C10 I502 D2
0282 F12 3568 C10 I503 B6
0302 D10 3569 F8 I504 C6
1500 C3 3570 D11 I505 E2
1515 A8 3580 B9 I506 C7
2500 C4 4500 D10 I507 F2
2501 B5 5500 C4 I508 D6
2502 C5 5501 C4 I509 F3
2503 C7 5502 D4 I510 D6
2504 C7 5505 G10 I511 E6
2505 B3 5520 C8 I512 E7
2506 C7 5521 D7 I513 E8
2507 C7 5560 E9 I514 D7
2508 C8 5561 E11 I515 F9
2515 C8 5562 C9 I516 F9
2516 B8 5563 E10 I517 F9
2520 G3 6500 B6 I518 E10
2521 E2 6501 B6 I519 F10
2522 D7 6502 B6 I520 C9
2523 D7 6503 B6 I521 C10
2524 D7 6520 F2 I522 D9
2525 F7 6521 E7 I523 G8
2526 E7 6522 E3 I525 A11
2527 D8 6523 C6 I526 E9
2528 E2 6540 F9 I527 E10
2540 F10 6541 F9 I528 C2
2541 G9 6560 E9 I529 C4
2542 F10 6561 E9 I530 B8
2569 G11 6562 C9 I531 E2
2660 E9 6563 J9 I532 F7
2561 E10 6564 C9 I533 D7
2562 C9 6565 B11 I534 C10
2563 D9 6566 G10 I535 C10
2564 C9 6567 D9 I536 C8
2565 E8 6569 G9 I537 F10
2566 C10 6570 G8 I538 F8
2567 B11 6580 B9 I539 E9
2568 G9 6581 B9 I540 E10
2569 C9 7515 F8 I541 E9
2580 B9 7520 D3 I543 A11
3500 D2 7521 D7 I544 C8
3501 D2 7522 D6 I545 D9
3502 C5 7540 F10 I546 C8
3503 B5 7541 F9 I547 D4
3504 B5 7542 G8 I548 G9
3505 C5 7560 B11 I549 G9
3506 D4 7561 D10
3507 D4 7562 C10
3508 B5 7564 C10
3519 E8 7580 B8
3520 G3 9500 C2
3521 F2 9501 C3
3522 D6 9502 C5
3523 E7 9503 B6
3524 E7 9504 D11
3525 E6 9520 D7
3526 E7 F501 B2
3527 C7 F502 B2
3528 D7 F503 C3
3529 C6 F504 C3
3530 D6 F505 C3
3531 E2 F506 C3
3540 F9 F507 B7
3541 F9 F508 C7
3542 F9 F509 D8
3543 F10 F510 D7
3544 F10 F511 C11
3545 F10 F512 C9
3546 F9 F513 E10
3547 F10 F514 C7
3548 E10 F515 E10
3549 E11 F516 E10
3550 F11 F517 G9
3552 G9 F518 B11
3558 B10 F519 B11
3559 B10 F520 E11
3560 C10 F521 D11
3561 C9 F522 F11
3562 D9 F523 F11

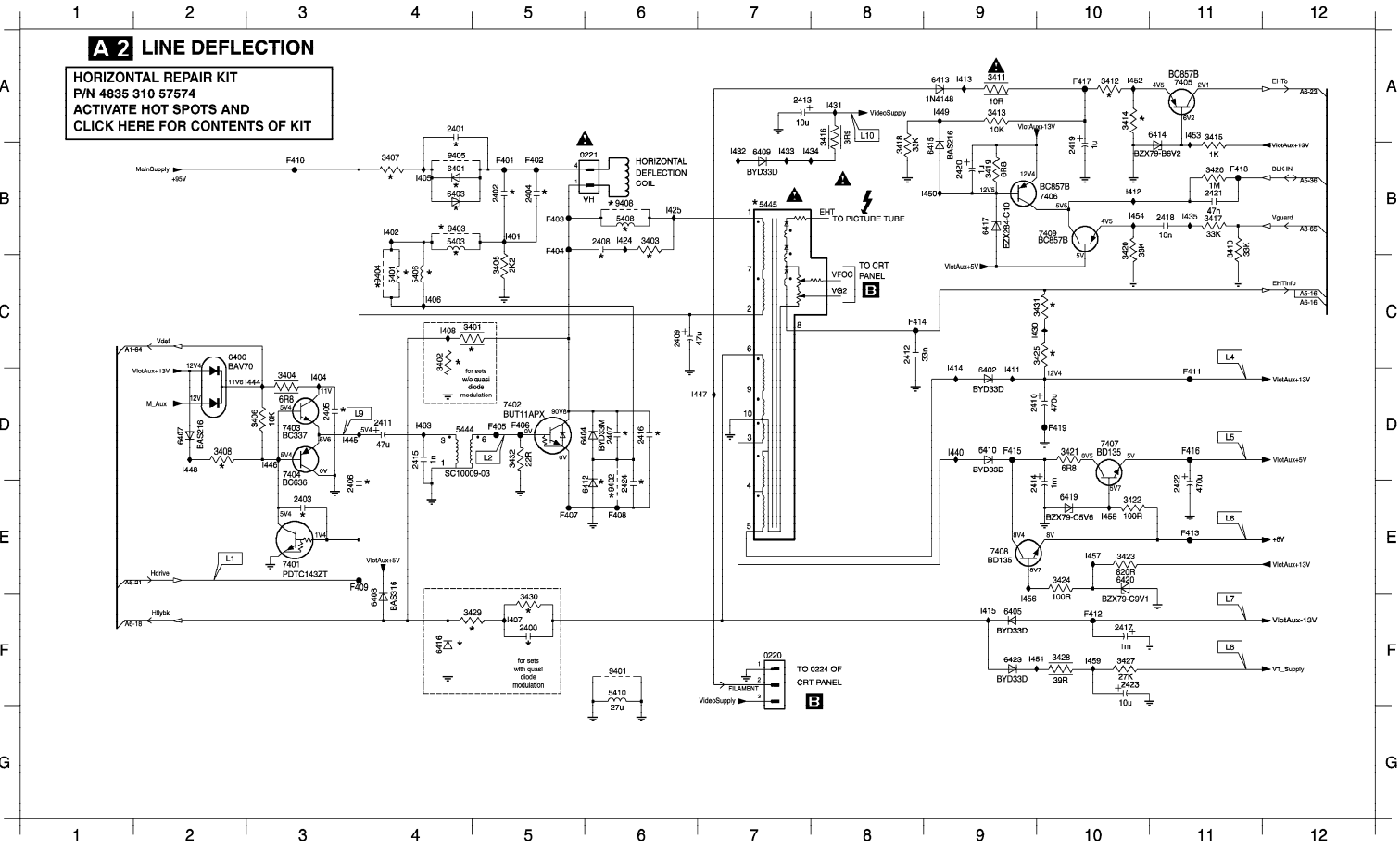

0220 F7
0221 B5
2400 F5
2401 A4
2402 B5
2403 E3
2404 B5
2405 D3
2406 E3
2407 D6
2408 B6
2409 C6
2410 D9
2411 D4
2412 C8
2413 A7
2414 F9
2415 D4
2416 D6
2417 F10
2418 B11
2419 D10
2420 B9
2421 B11
2422 E11
2423 F10
2424 E6
3401 C5
3402 C4
3403 B5
3404 D3
3405 C5
3406 D3
3407 B4
3408 D2
3410 B11
3411 A9
3412 A10
3413 A9
3414 A10
3415 A11
3416 A8
3417 B11
3418 B8
3419 B9
3420 B10
3421 D10
3422 E10
3423 E10
3424 E10
3425 C10
3426 B11
3427 F10
3428 F10
3429 F5
3430 F5
3431 C10
3432 D5
5401 C4
5403 B4
5406 C4
5408 B6
5410 F6
5444 D4
5445 D7
6401 B4
6402 D9
6403 B4
6404 D6
6405 F9
6406 C2
6407 D2
6408 F4
6409 B7
6410 D9
6412 E6
6413 A9
6414 A11
6415 D9
6416 F4
6417 B9
6419 E10
6420 E10
6423 F9
7401 E3
7402 D5
7403 D9
7404 D3
7405 A11
7406 B10
7407 D10
7408 E9
7409 B10
9401 F6
9402 E6
9403 B4
9404 C4
9405 B4
9406 B6
F401 B5
F402 B5
F403 B5
F404 B5
F405 D5
F406 D5
F407 E5
F408 E6
F409 E3
F410 B3
F411 D11
F412 F10
F413 E11
F414 C8
F415 D9
F416 D11
F417 A10
F418 B11
F419 D10
I401 B6
I402 B4
I403 D4
I404 D3
I405 C6
I406 B4
I407 F5
I408 C4
I411 D9
I412 B10
I413 A9
I414 C9
I415 F9
I424 B6
I425 B6
I426 C9
I431 A8
I432 R7
I433 B7
I434 B7
I435 B11
I440 D9
I444 D3
I445 D3
I446 D3
I447 D7
I448 D2
I449 B9
I450 B9
I451 F9
I452 A10
I453 A11
I454 B10
I455 E10
I456 F9
I457 F10
I458 F10
L1
L2
L4
L5
L6
L7
L8
L9
L10

A 3 FRAME DEFLECTION

VERTICAL REPAIR KIT
P/N 4835 310 57573
ACTIVATE HOT SPOTS AND
CLICK HERE FOR CONTENTS OF KIT

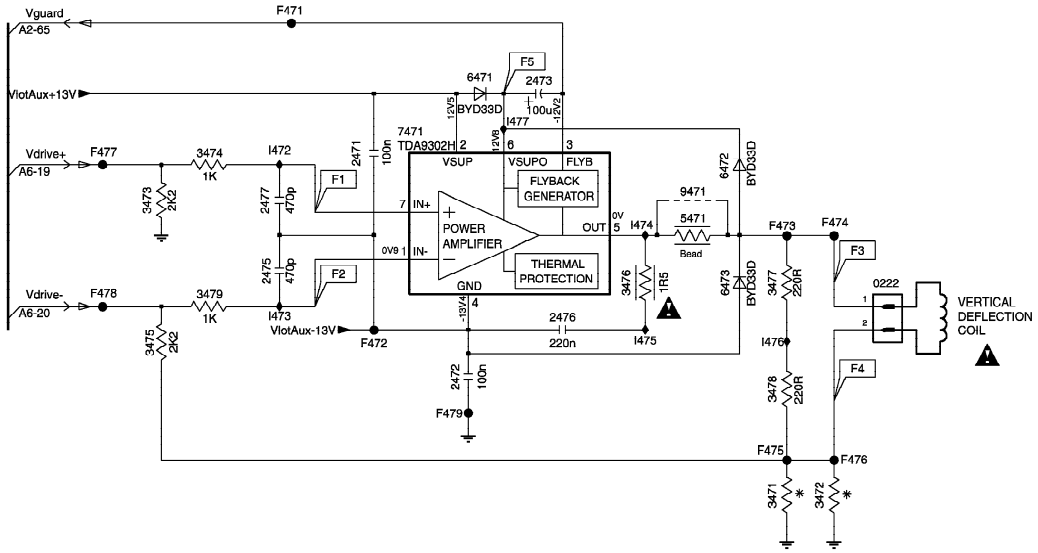

0222 D8
2471 C5
2472 E6
2473 C6
2475 D4
2476 D6
2477 D4
3471 F7
3472 F8
3473 D4
3474 C4
3475 E4
3476 D7
3477 D7
3478 E7
3479 D4
5471 D7
6471 C6
6472 D7
6473 D7
7471 C5
9471 D7
F471 C5
F472 E5
F473 D8
F474 D8
F475 E7
F476 E8
F477 C3
F478 D3
F479 E6
I472 C4
I473 D4
I474 D7
I475 E7
I476 E7
I477 C6

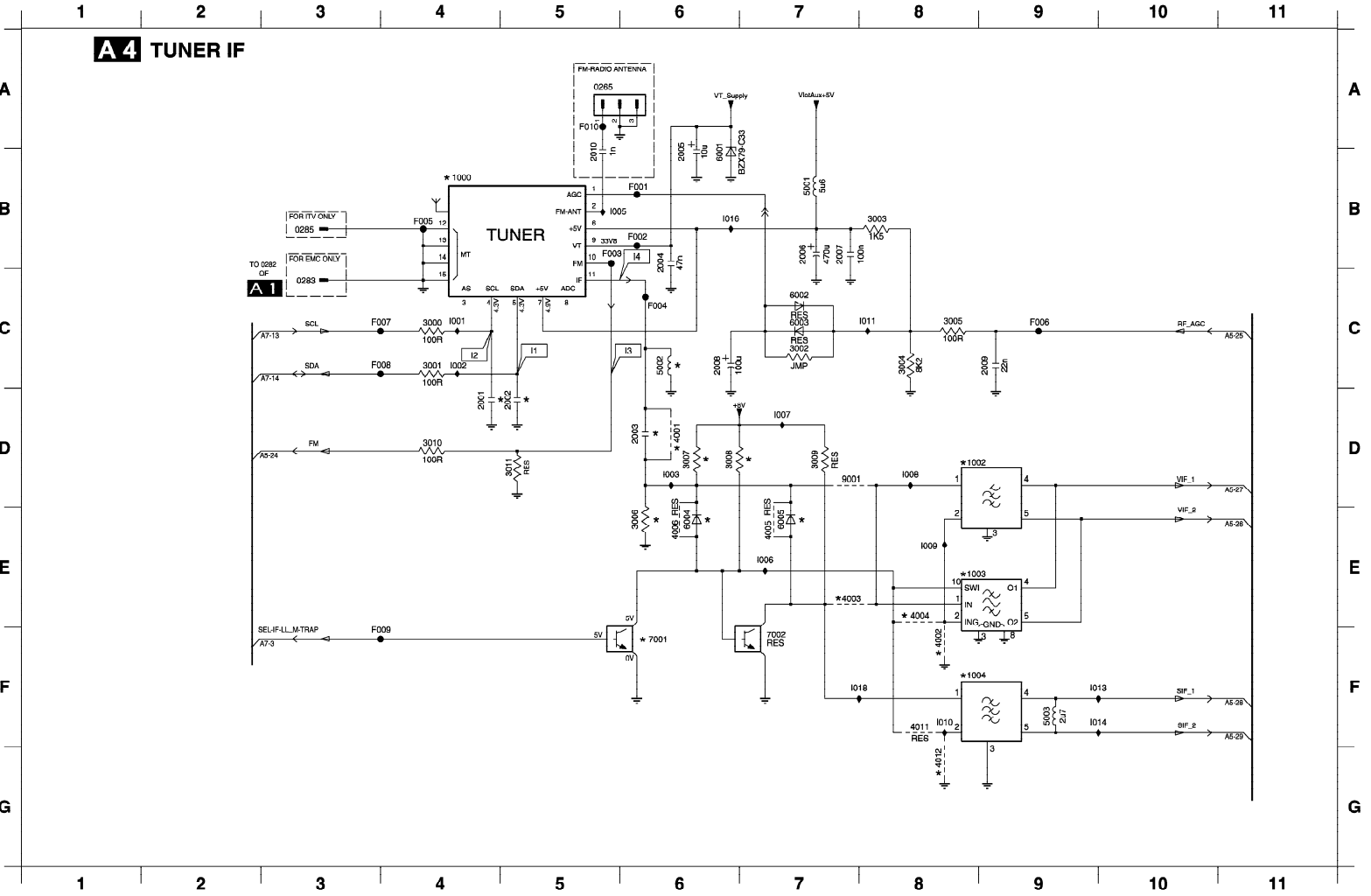

0265 A5
0283 C3
0285 B3
1000 B4
1002 D8
1003 E8
1004 F8
2001 D4
2002 D5
2003 D6
2004 B6
2005 B6
2006 B7
2007 B7
2008 C6
2009 C9
2010 B5
3000 C4
3001 C4
3002 C7
3003 B8
3004 C8
3005 C8
3006 E6
3007 D6
3008 D6
3009 D7
3010 U4
3011 D5
4001 D8
4002 F8
4003 E7
4004 E8
4005 E7
4006 E5
4011 F8
4012 G8
5001 B7
5002 C6
5003 F9
6001 B6
6002 C7
6003 C7
6004 E6
6005 E7
7001 F6
7002 F7
9001 D7
F001 B6
F002 B6
F003 B5
F004 C6
F005 B4
F006 C9
F007 C4
F008 C4
F009 F4
F010 A5
I001 C4
I002 C4
I003 D6
I005 B5
I006 E7
I007 D7
I008 D8
I009 E8
I010 F8
I011 C8
I013 F9
I014 F9
I016 B6
I018 F7

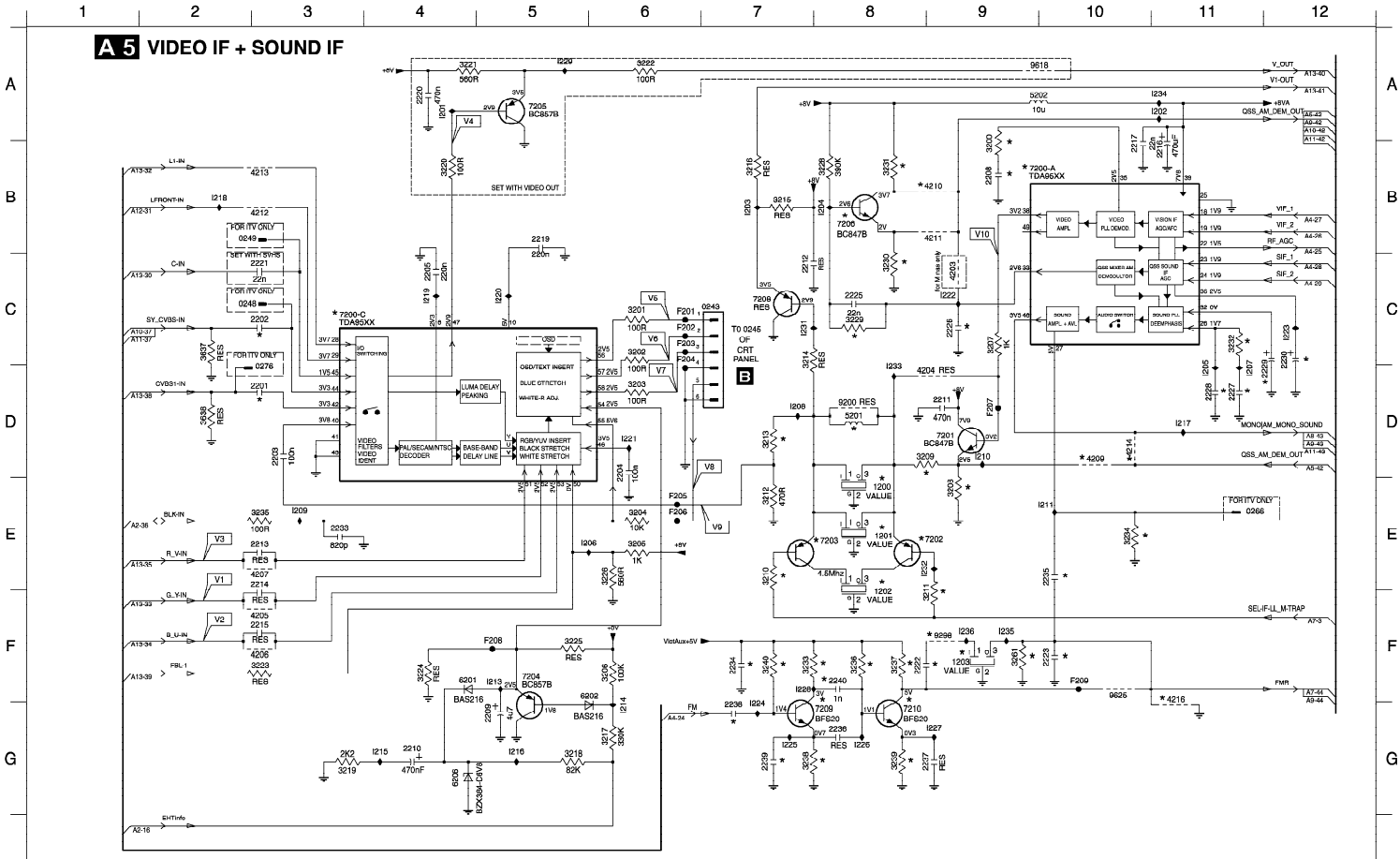
A 5 VIDEO IF + SOUND IF
SET WITH VIDEO OUT
FOR ITV ONLY
SET WITH CRT PCB
7200-C TDA95XX
7200-A TDA96XX
OSD/TEXT INSERT
BLUE STRETCH
WHITE-R ADJ.
LUMA DELAY PEAKING
VIDEO FILTERS VIDEO IDENT
PAL/SECAM/NTSC DECODER
BASE-BAND DELAY LINE
RGB/YUV INSERT BLACK STRETCH WHITE STRETCH
VIDEO AMPL
VIDEO PLL DEMOD
VISION IF AGC/AFC
QSS MIXER AM DEMODULATOR
QSS SOUND IF AGC
SOUND AMPL + AM.
AUDIO SWITCH
SOUND PLL DEEMPHASIS
T0 0245 OF CRT PANEL
MONO/AM_MONO_SOUND
QSS_AM_DEM_OUT
SEL-IF-LL_M-TRAP
FMR
V_OUT
V1-OUT
+8VA
RF_AGC
VIF_1
VIF_2
SIF_1
SIF_2
L1-IN
LFRONT-IN
C-IN
SY_CVBS-IN
CVBS1-IN
BLK-IN
R_V-IN
G_Y-IN
B_U-IN
FBL 1
EHTInfo
FM
VictAux+5V
7205 BC857B
7206 BC847B
7209 BF820
7210 BF820
7201 BC847B
7203
7202
7204 BC857B
BAS216
BZX384-C6V8
1200 VALUE
1201 VALUE
1202 VALUE
1203 VALUE
4.5MHz
9200 RES
9618
9625
9626
9628
9629
9630
9631
9632
9633
9634
9635
9636
9637
9638
9639
9640
9641
9642
9643
9644
9645
9646
9647
9648
9649
9650
9651
9652
9653
9654
9655
9656
9657
9658
9659
9660
9661
9662
9663
9664
9665
9666
9667
9668
9669
9670
9671
9672
9673
9674
9675
9676
9677
9678
9679
9680
9681
9682
9683
9684
9685
9686
9687
9688
9689
9690
9691
9692
9693
9694
9695
9696
9697
9698
9699
9700
9701
9702
9703
9704
9705
9706
9707
9708
9709
9710
9711
9712
9713
9714
9715
9716
9717
9718
9719
9720
9721
9722
9723
9724
9725
9726
9727
9728
9729
9730
9731
9732
9733
9734
9735
9736
9737
9738
9739
9740
9741
9742
9743
9744
9745
9746
9747
9748
9749
9750
9751
9752
9753
9754
9755
9756
9757
9758
9759
9760
9761
9762
9763
9764
9765
9766
9767
9768
9769
9770
9771
9772
9773
9774
9775
9776
9777
9778
9779
9780
9781
9782
9783
9784
9785
9786
9787
9788
9789
9790
9791
9792
9793
9794
9795
9796
9797
9798
9799
9800
9801
9802
9803
9804
9805
9806
9807
9808
9809
9810
9811
9812
9813
9814
9815
9816
9817
9818
9819
9820
9821
9822
9823
9824
9825
9826
9827
9828
9829
9830
9831
9832
9833
9834
9835
9836
9837
9838
9839
9840
9841
9842
9843
9844
9845
9846
9847
9848
9849
9850
9851
9852
9853
9854
9855
9856
9857
9858
9859
9860
9861
9862
9863
9864
9865
9866
9867
9868
9869
9870
9871
9872
9873
9874
9875
9876
9877
9878
9879
9880
9881
9882
9883
9884
9885
9886
9887
9888
9889
9890
9891
9892
9893
9894
9895
9896
9897
9898
9899
9900
9901
9902
9903
9904
9905
9906
9907
9908
9909
9910
9911
9912
9913
9914
9915
9916
9917
9918
9919
9920
9921
9922
9923
9924
9925
9926
9927
9928
9929
9930
9931
9932
9933
9934
9935
9936
9937
9938
9939
9940
9941
9942
9943
9944
9945
9946
9947
9948
9949
9950
9951
9952
9953
9954
9955
9956
9957
9958
9959
9960
9961
9962
9963
9964
9965
9966
9967
9968
9969
9970
9971
9972
9973
9974
9975
9976
9977
9978
9979
9980
9981
9982
9983
9984
9985
9986
9987
9988
9989
9990
9991
9992
9993
9994
9995
9996
9997
9998
9999

A 6 SYNCHRONIZATION

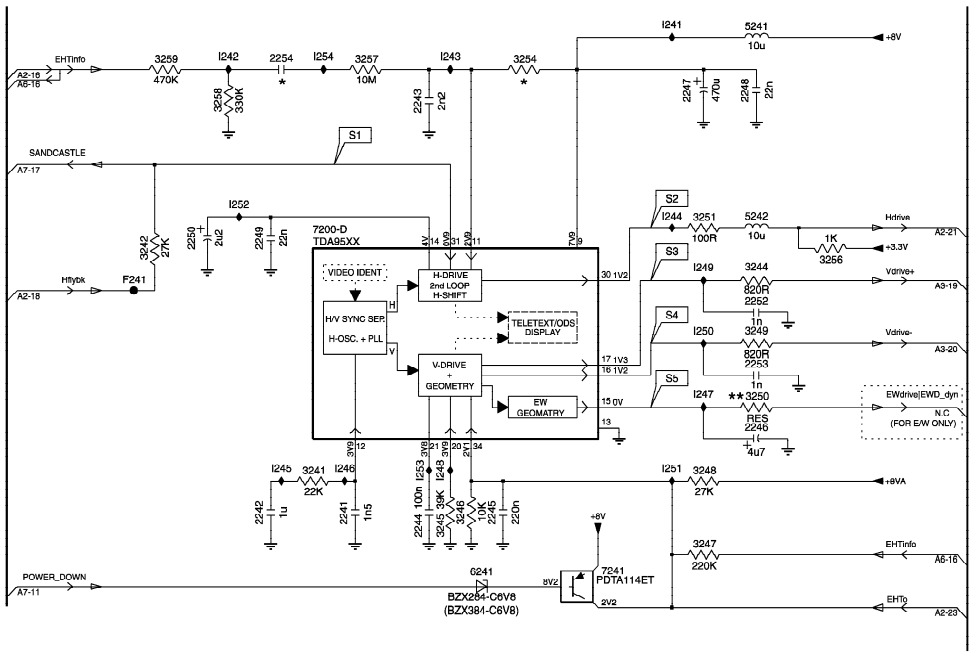

2241 E6
2242 E5
2243 B6
2244 E6
2245 E7
2246 D8
2247 B8
2248 B8
2249 C5
2250 C5
2252 C8
2253 D8
2254 B5
3241 D5
3242 C4
3244 C8
3245 E6
3246 E6
3247 E8
3248 D8
3249 C8
3250 D8
3251 C8
3254 B7
3256 C9
3257 B6
3258 B5
3259 B4
5241 A8
5242 C8
6241 E6
7200-D C5
7241 E7
F241 C4
I241 A8
I242 B5
I243 B6
I244 C8
I245 D5
I246 D6
I247 D6
I248 D6
I249 C8
I250 C8
I251 D8
I252 C5
I253 D6
I254 B5

A 7 CONTROL

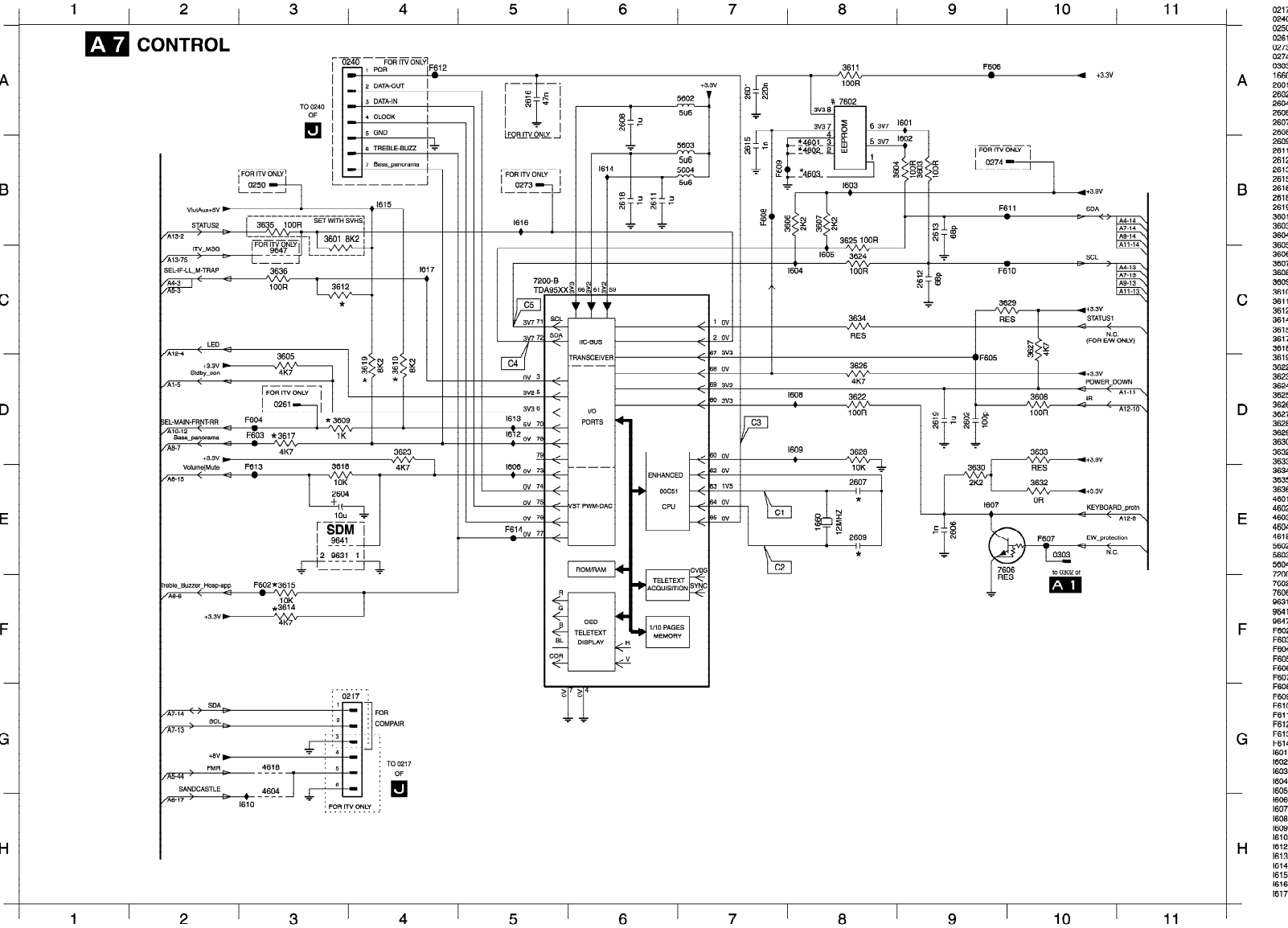

0217 G3
0240 A3
0250 B3
0261 D3
0273 B5
0274 B9
0303 E10
1660 F8
2001 A7
2602 D9
2604 E8
2606 E9
2607 E8
2608 A6
2609 E8
2611 B6
2612 C9
2613 B9
2615 B7
2616 A5
2618 B6
2619 D9
3601 B3
3603 B9
3604 B6
3605 C3
3606 B8
3607 B8
3608 D10
3609 D3
3610 D4
3611 A8
3612 C3
3614 F3
3615 F3
3617 D9
3618 E3
3619 D4
3622 D8
3623 D4
3624 C8
3625 B8
3626 D8
3627 C10
3628 D8
3629 C10
3630 E9
3632 E10
3633 E10
3634 C8
3635 B3
3636 C3
4601 B8
4602 B8
4603 B8
4604 H3
4618 G3
5602 A7
5603 B7
5604 B7
7200-B C5
7602 A6
7606 E10
9631 E3
9641 E3
9647 C3
F602 F3
F603 D3
F604 D3
F605 D9
F606 A9
F607 E10
F608 B7
F609 B7
F610 C9
F611 B10
F612 A4
F613 E3
F614 E5
I601 A9
I602 B9
I603 B8
I604 C8
I605 C8
I606 E5
I607 E9
I608 D8
I609 D8
I610 H3
I612 D5
I613 D5
I614 D6
I615 B4
I616 B5
I617 C4

A 8 AUDIO AMPLIFIER + MONO SOUND PROCESSING

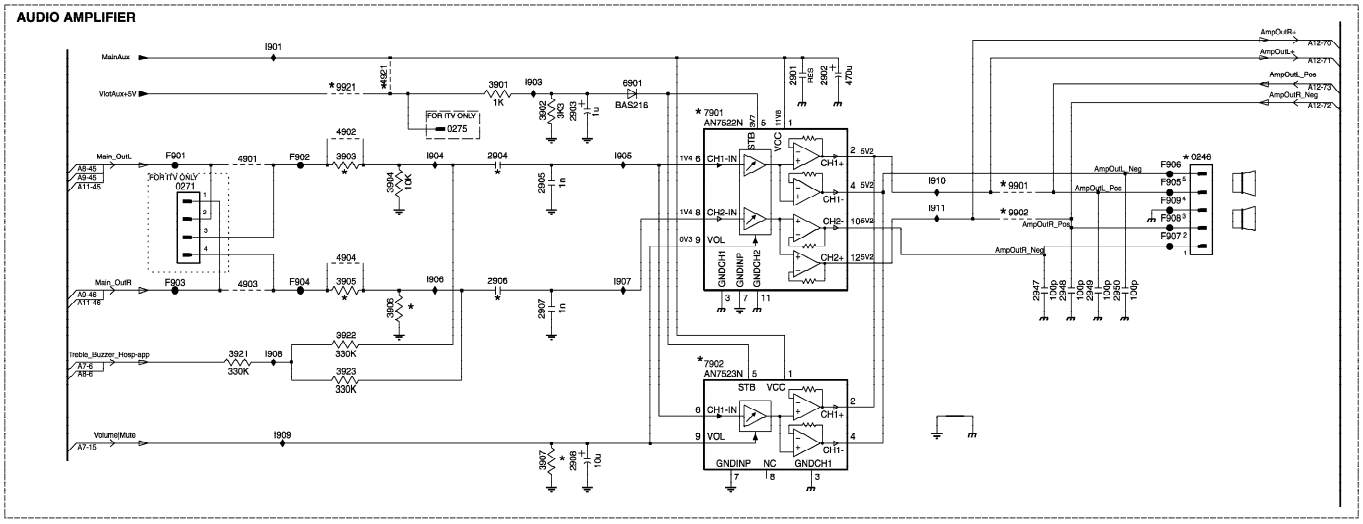

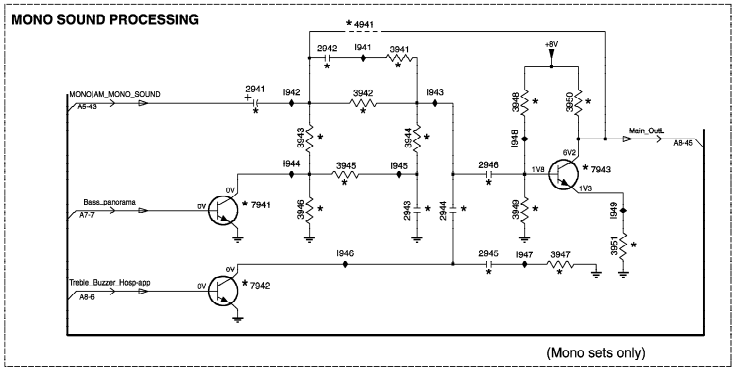

0246 B11
0271 B3
0275 B5
2901 B8
2902 B8
2903 B6
2904 B5
2905 B6
2906 C5
2907 C6
2908 E6
2941 F3
2942 F4
2943 G4
2944 G5
2945 G5
2946 G5
2947 C9
2948 C10
2949 C10
2950 C10
3901 B5
3902 B6
3903 B4
3904 B4
3905 C4
3906 C4
3907 E6
3921 D3
3922 D4
3923 D4
3941 F4
3942 F4
3943 G4
3944 G4
3945 G4
3946 G4
3947 G5
3948 F5
3949 G5
3950 F6
3951 G6
4901 B3
4902 B4
4903 C3
4904 C4
4921 B4
4941 F4
6901 B6
7901 B7
7902 D7
7941 G3
7942 H3
7943 G6
9901 B9
9902 C9
9921 B4
F901 B3
F902 B4
F903 C3
F904 C4
F905 B11
F906 B11
F907 C11
F908 C11
F909 C11
I901 A3
I903 B5
I904 B5
I905 B6
I906 C5
I907 C6
I908 D3
I909 D3
I910 B9
I911 C9
I941 F4
I942 F3
I943 F5
I944 G3
I945 G4
I946 G4
I947 G5
I948 G5
I949 G6

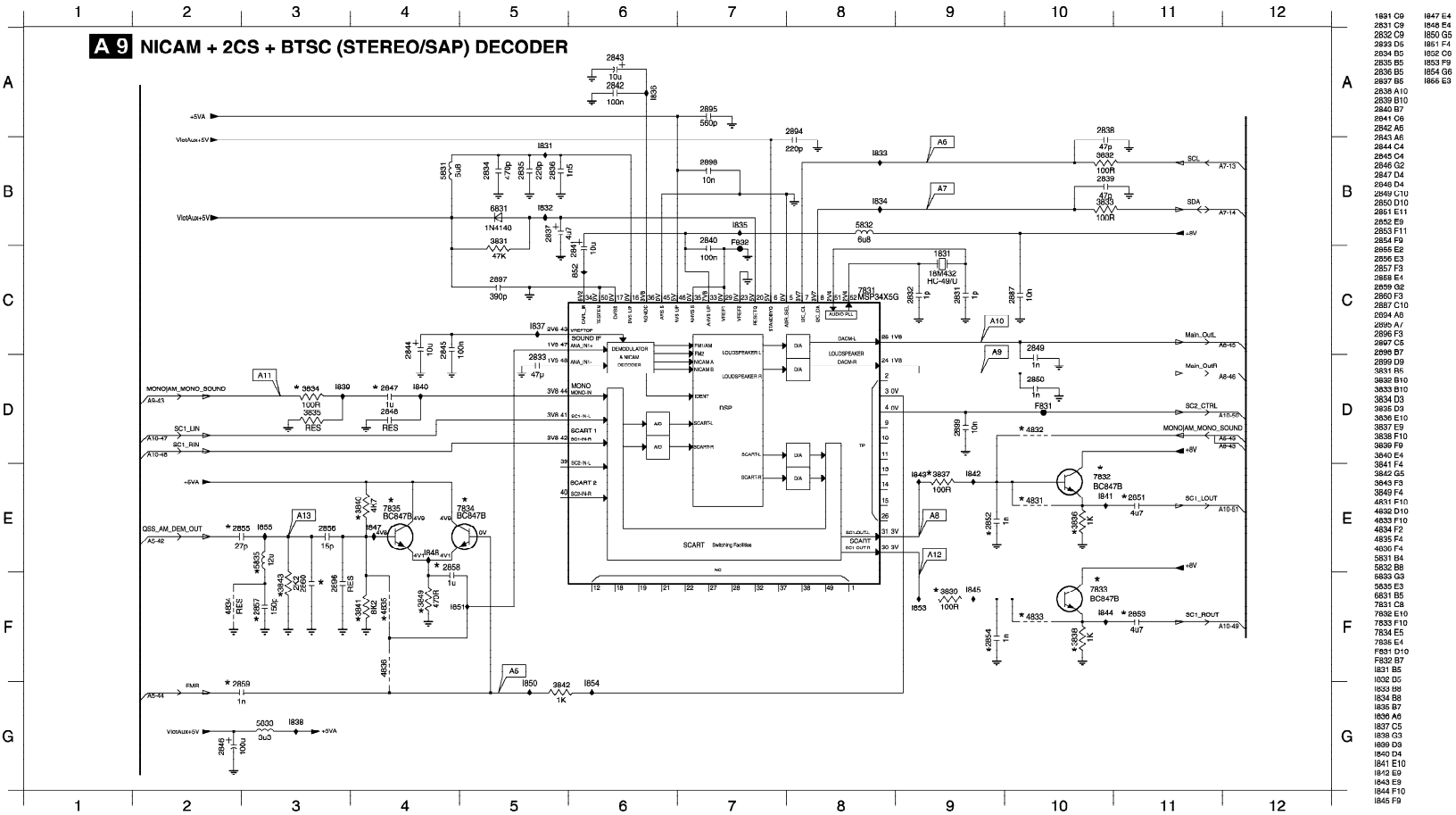

I831 C9 I847 E4
I832 C9 I848 E4
I833 C9 I850 G5
I834 D5 I851 F4
I835 B5 I852 C6
I836 B5 I853 F9
I837 B5 I854 G6
I838 A10 I855 E9
I839 B10
I840 B7
I841 C6
I842 A5
I843 A6
I844 C4
I845 C4
I846 G2
I847 D4
I848 D4
I849 C10
I850 D10
I851 E11
I852 E9
I853 F11
I854 F9
I855 E2
I856 E3
I857 F3
I858 E4
I859 G2
I860 F3
I887 C10
I894 A6
I895 A7
I896 F3
I897 C6
I898 B7
I899 D9
I831 B5
I832 B10
I833 B10
I834 D3
I835 D3
I836 E10
I837 E9
I838 F10
I839 F9
I840 E4
I841 F4
I842 G5
I843 F9
I849 F4
I831 F10
I832 D10
I833 F10
I834 F2
I835 F4
I690 F4
I831 B4
I832 B8
I833 G3
I835 E3
I831 B5
I831 C8
I832 E10
I733 F10
I734 E5
I735 E4
F831 D10
F832 B7
I831 B5
I002 D5
I833 B8
I834 B8
I835 B7
I836 A6
I837 C5
I838 G3
I899 D3
I840 D4
I841 E10
I842 E9
I843 E9
I844 F10
I845 F9

A 10 AUDIO/VIDEO SOURCE SWITCHING

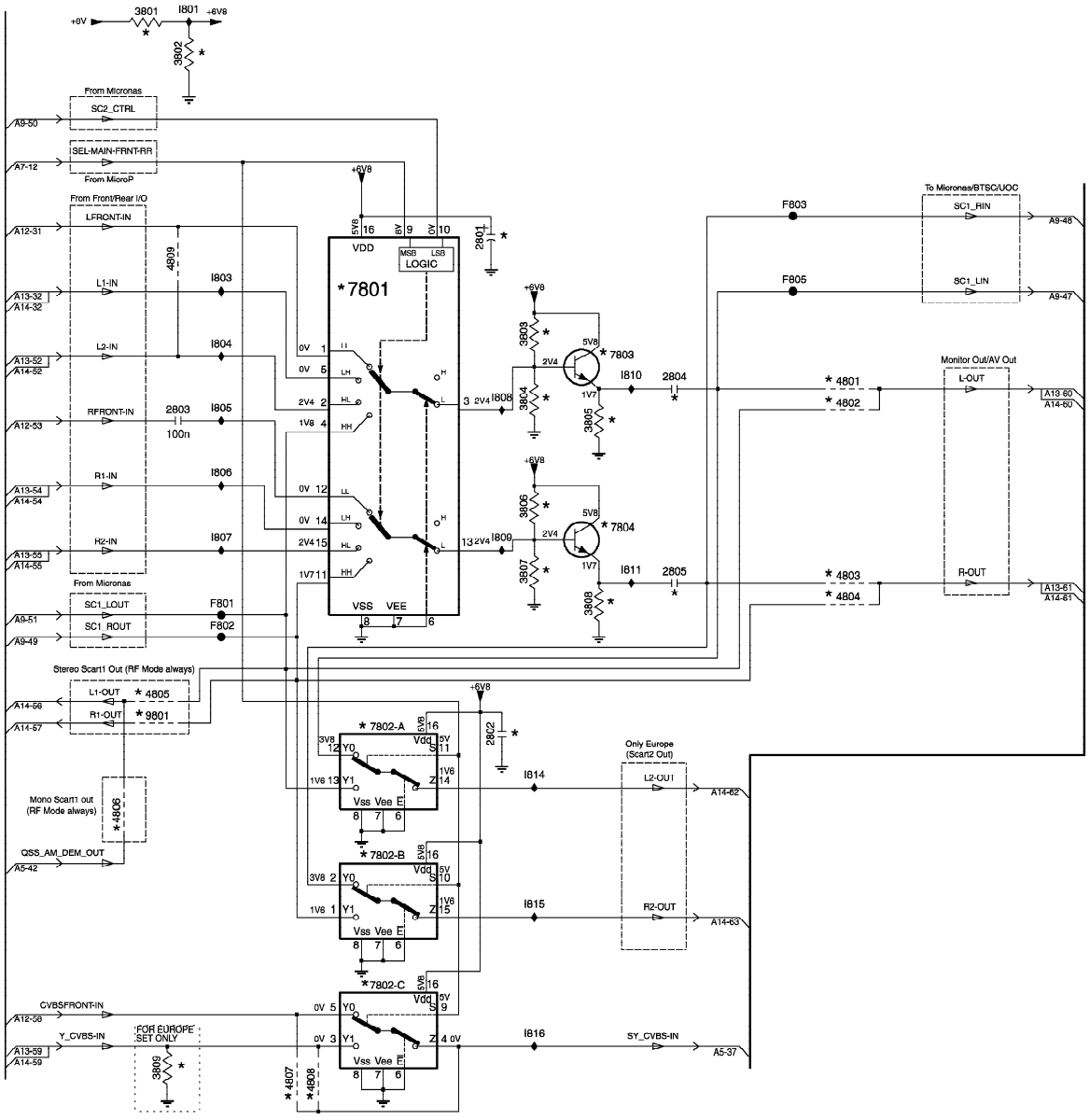

2801 B5
2802 F5
2803 D3
2804 C6
2805 E6
3801 A2
3802 A3
3803 C5
3804 D5
3805 D5
3806 D5
3807 E5
3808 E5
3809 H2
4801 C7
4802 D7
4803 E7
4804 E7
4805 F2
4806 F2
4807 H3
4808 H3
4809 C3
7801 C4
7802-A F4
7802-B G4
7802-C G4
7803 C5
7804 D5
9801 F2
F801 E3
F802 E3
F803 B7
F805 C7
I801 A3
I803 C3
I804 C3
I805 D3
I806 D3
I807 D3
I808 D5
I809 D5
I810 C6
I811 E6
I814 F5
I815 G5
I816 H5

A 11 AUDIO - BTSC STEREO DECODER (ECONOMIC)

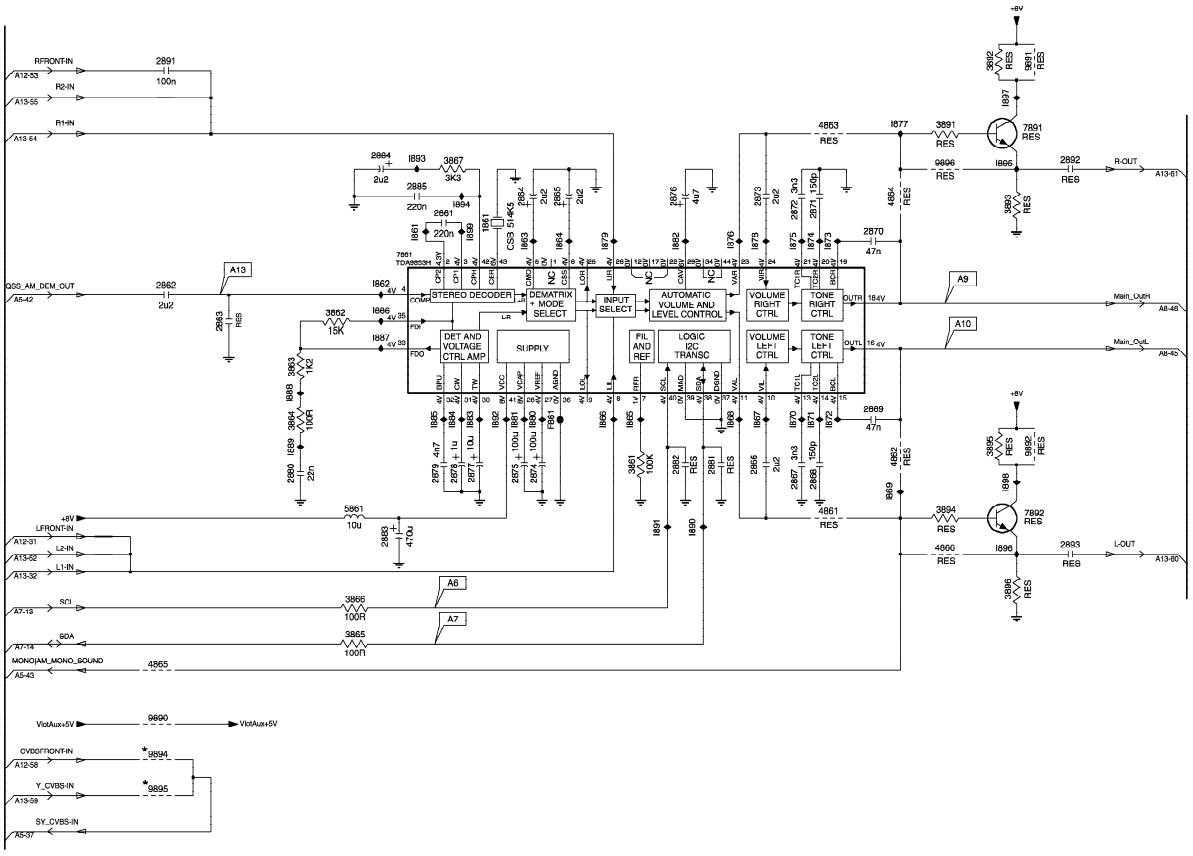

A 12 FRONT IO + FRONT CONTROL + HEADPHONE

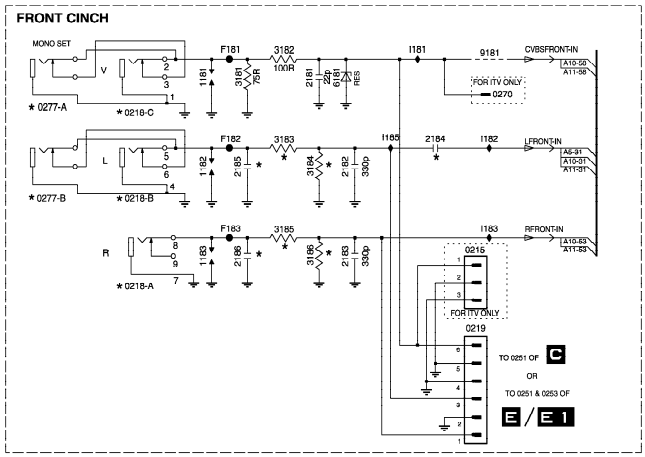

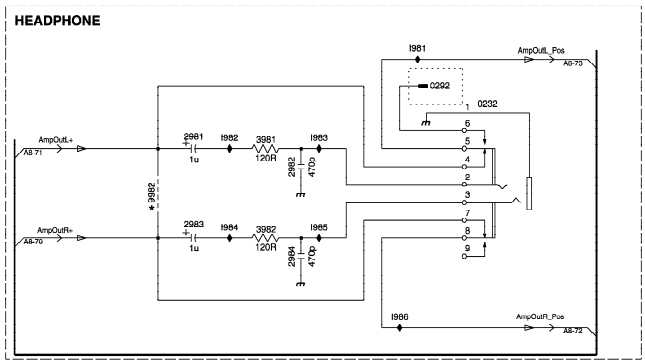

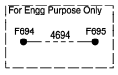

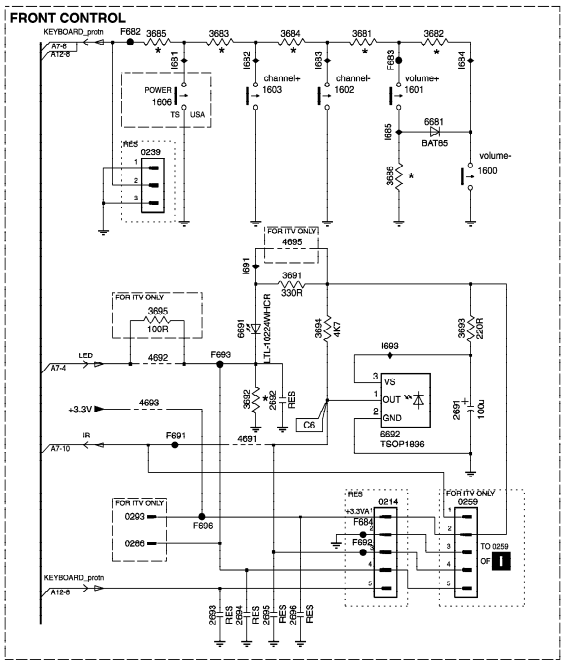

0214 E10
0215 C5
0218-A C3
0218-B C3
0218-C B3
0219 D5
0232 F5
0239 B8
0259 E11
0270 B6
0277-A B2
0277-B C2
0266 E8
0292 F5
0293 E8
1181 B3
1182 B3
1183 C3
1600 B11
1601 A10
1602 A10
1603 A9
1606 B8
2181 B4
2182 B4
2183 C4
2184 B5
2185 B4
2186 C4
2691 D11
2692 D9
2693 F9
2694 F9
2695 F9
2696 F9
2961 F3
2982 F4
2983 G3
2984 G4
3181 B4
3182 B4
3183 B4
3184 B4
3185 C4
3186 C4
3681 A10
3682 A11
3683 A9
3684 A9
3685 A8
3686 B10
3691 C9
3692 D9
3693 C11
3694 C10
3695 C8
3981 F4
3982 G4
4691 D9
4692 D8
4693 D8
4694 H2
4695 C9
6181 B4
6681 B11
6691 C9
6692 D10
9181 B6
9982 F3
F181 B4
F182 B4
F183 C4
F682 A8
F683 A10
F684 E10
F691 D9
F692 E10
F693 D9
F694 H2
F695 H2
F696 E9
I181 B5
I182 B6
I183 C6
I185 B5
I681 A8
I682 A9
I683 A10
I684 A11
I686 B10
I691 C9
I693 C10
I981 E5
I982 F3
I983 F4
I984 G3
I985 G4
I986 G5

A 13 REAR I/O CINCH

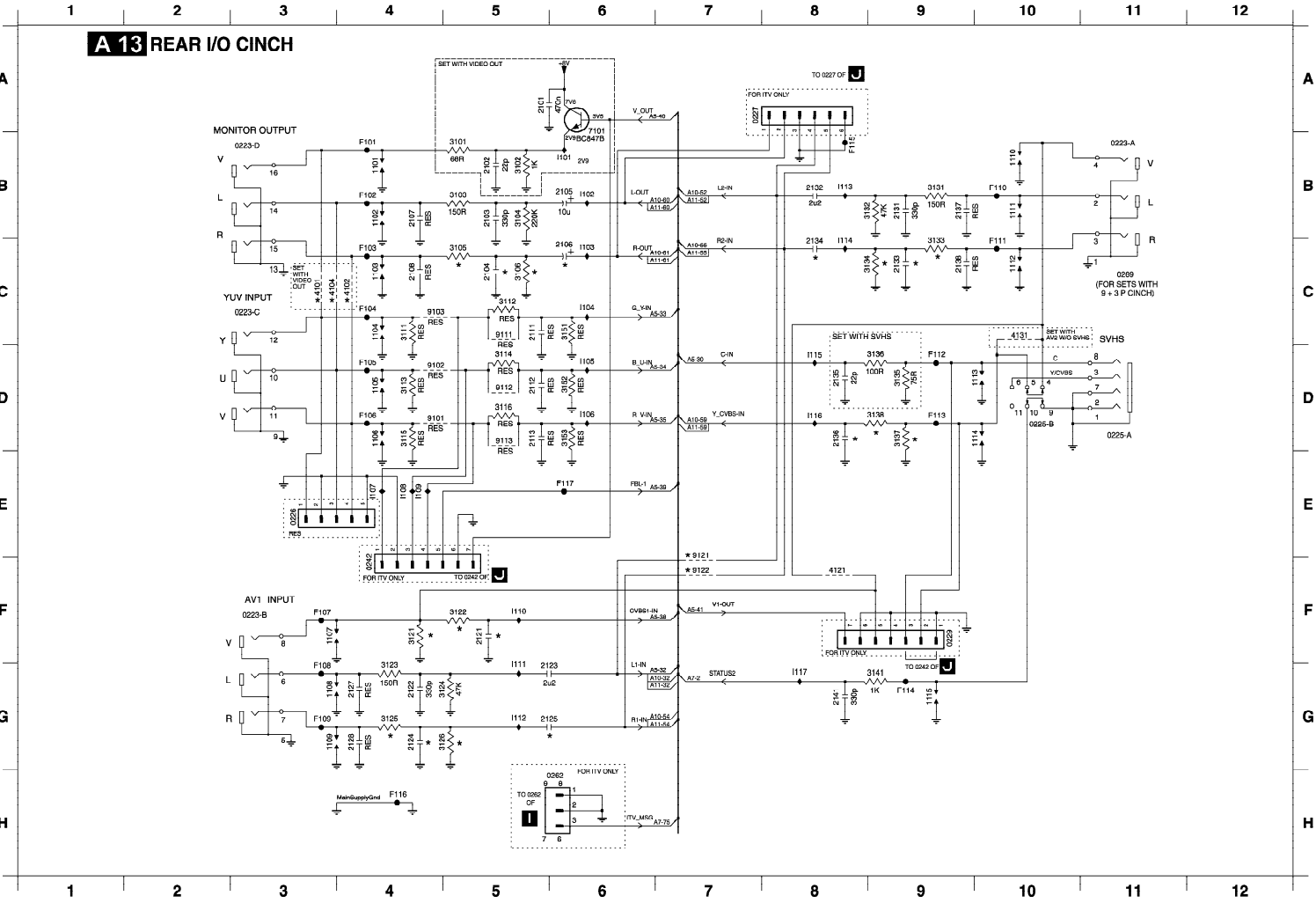

0223-A B11 F103 B4
0223-B F3 F103 C4
0223-C C3 F104 C4
0223-D B3 F105 D4
0225-A D11 F106 D4
0225-B D10 F107 F3
0226 E3 F108 G3
0227 A7 F109 G3
0229 F9 F110 B10
0242 E4 F111 C10
0262 H6 F112 D9
1101 B4 F113 D9
1102 B4 F114 G9
1103 C4 F115 B8
1104 C4 F116 H4
1105 D4 F117 E6
1106 D4 I101 B6
1107 F3 I102 B6
1108 G3 I103 C6
1109 G3 I104 C6
1110 B10 I105 D6
1111 B10 I106 D6
1112 C10 I107 E4
1113 D10 I108 E4
1114 D10 I109 E4
1115 G9 I110 F5
2101 A6 I111 G5
2102 B5 I112 G5
2103 B5 I113 B8
2104 C5 I114 C8
2105 B6 I115 D8
2106 C6 I116 D8
2107 B4 I117 G8
2108 C4
2111 C5
2112 D5
2113 D5
2121 F5
2122 G4
2123 G5
2124 G4
2126 G6
2127 G4
2128 G4
2131 B6
2132 B6
2133 C6
2134 C6
2135 D6
2136 D6
2137 B6
2138 C6
2141 G6
3101 B5
3102 B5
3103 B5
3104 B6
3105 C5
3106 C5
3111 C4
3112 C5
3113 D4
3114 D5
3115 D4
3116 D5
3121 F4
3122 F5
3123 G4
3124 G5
3125 G4
3126 G5
3131 B6
3132 B6
3133 C6
3134 C6
3135 D6
3136 D6
3137 D6
3138 D6
3141 G6
3151 C6
3152 D6
3153 D6
4101 C3
4102 C4
4104 C3
4121 F8
4131 C10
7101 B6
9101 D4
9102 D4
9103 C4
9111 C5
9112 D5
9113 D5
9121 F7
9122 F7
F101 B4

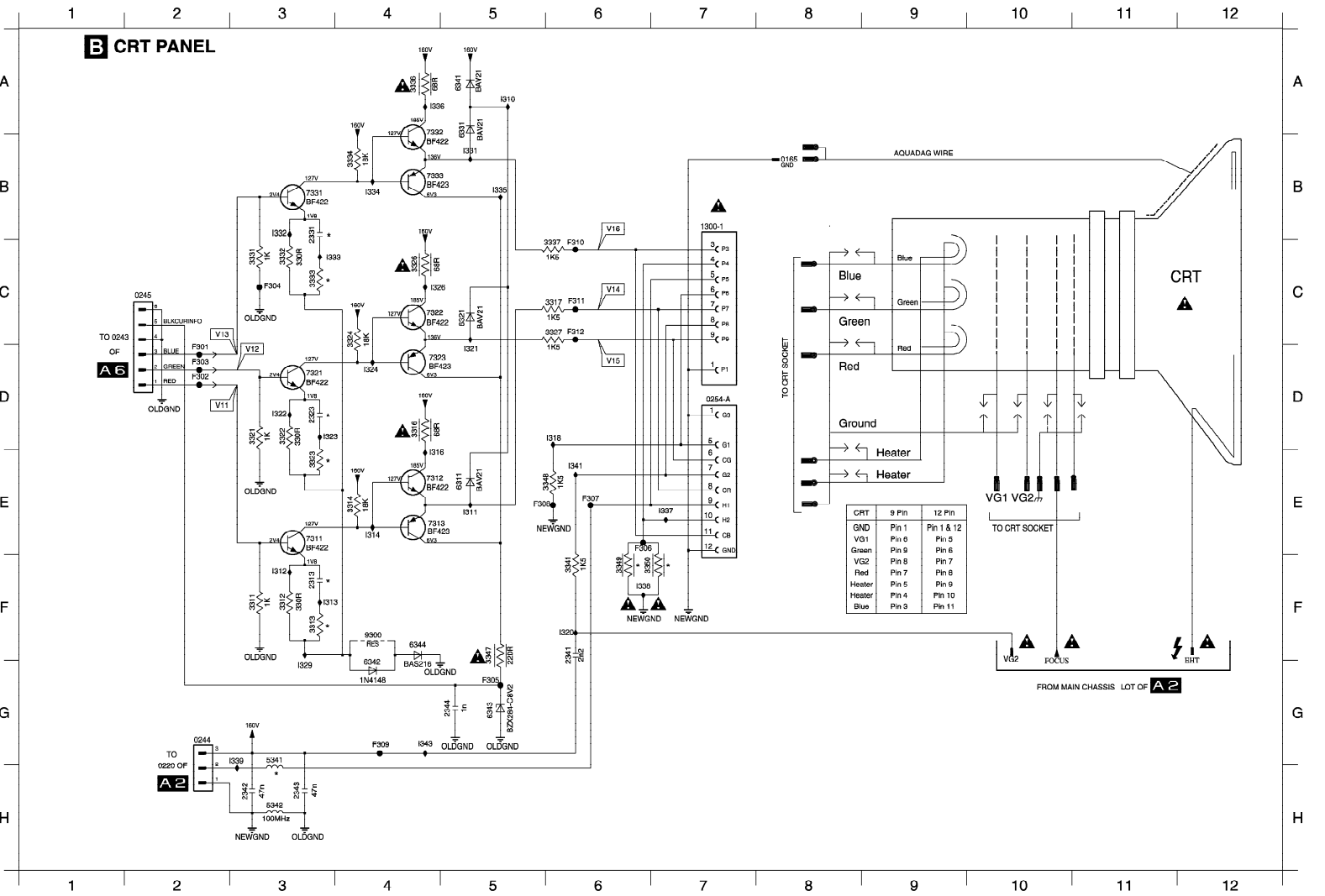
B CRT PANEL
CRT
Blue
Green
Red
Ground
Heater
Heater
AQUADAG WIRE
TO CRT SOCKET
VG1 VG2
FOCUS
EHT
FROM MAIN CHASSIS LOT OF A2
TO 0243 OF A6
TO 0220 OF A2
OLDGND
NEWGND
1300-1
0254-A
CRT | 9 Pin | 12 Pin
GND | Pin 1 | Pin 1 & 12
VG1 | Pin 6 | Pin 5
Green | Pin 9 | Pin 6
VG2 | Pin 8 | Pin 7
Red | Pin 7 | Pin 8
Heater | Pin 5 | Pin 9
Heater | Pin 4 | Pin 10
Blue | Pin 3 | Pin 11

C SIDE AV PANEL + HP PANEL

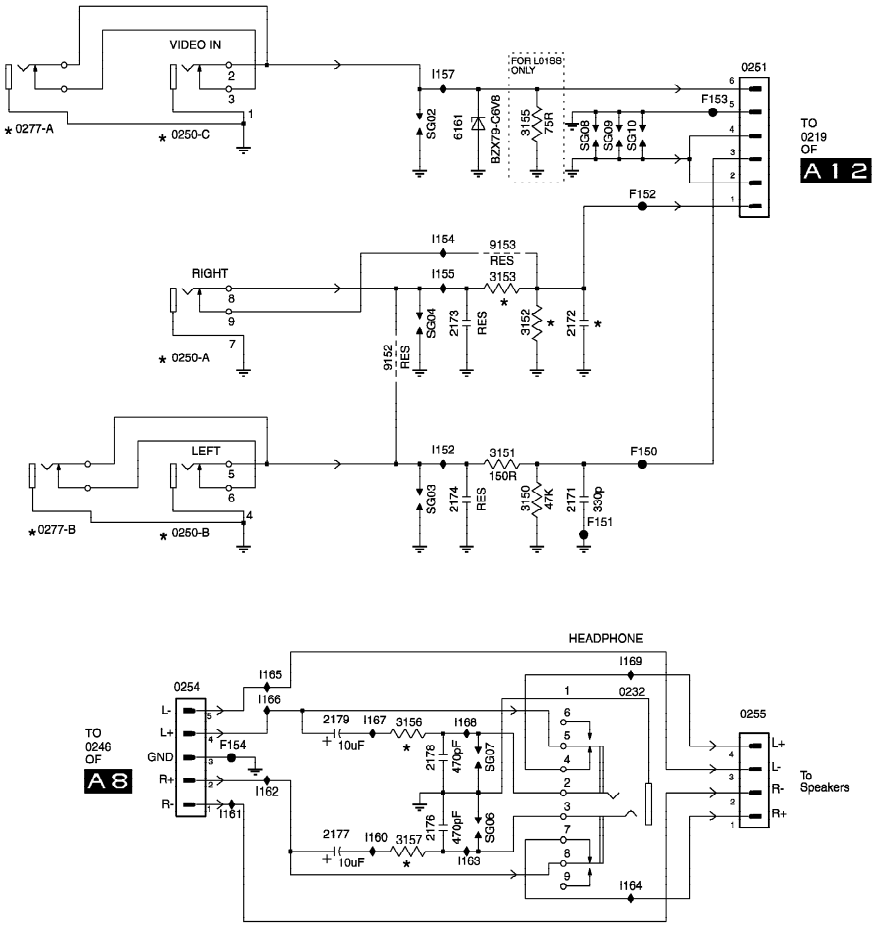

0232 F8
0250-A C5
0250-B D5
0250-C B5
0251 B8
0254 E5
0255 F8
0277-A B4
0277-B D4
2171 D7
2172 C7
2173 C7
2174 D7
2176 F7
2177 F6
2178 F7
2179 F6
3150 D7
3151 D7
3152 C7
3153 C7
3155 B7
3156 F6
3157 F6
6161 B7
9152 C6
9153 C7
F150 D8
F151 D8
F152 B8
F153 B8
F154 F5
I152 D7
I154 C7
I155 C7
I157 B7
I160 F6
I161 F5
I162 F5
I163 G7
I164 G8
I165 E6
I166 F6
I167 F6
I168 F7
I169 E8
SG02 R6
SG03 D6
SG04 C6
SG06 F7
SG07 F7
SG08 B7
SG09 B8
SG10 B8

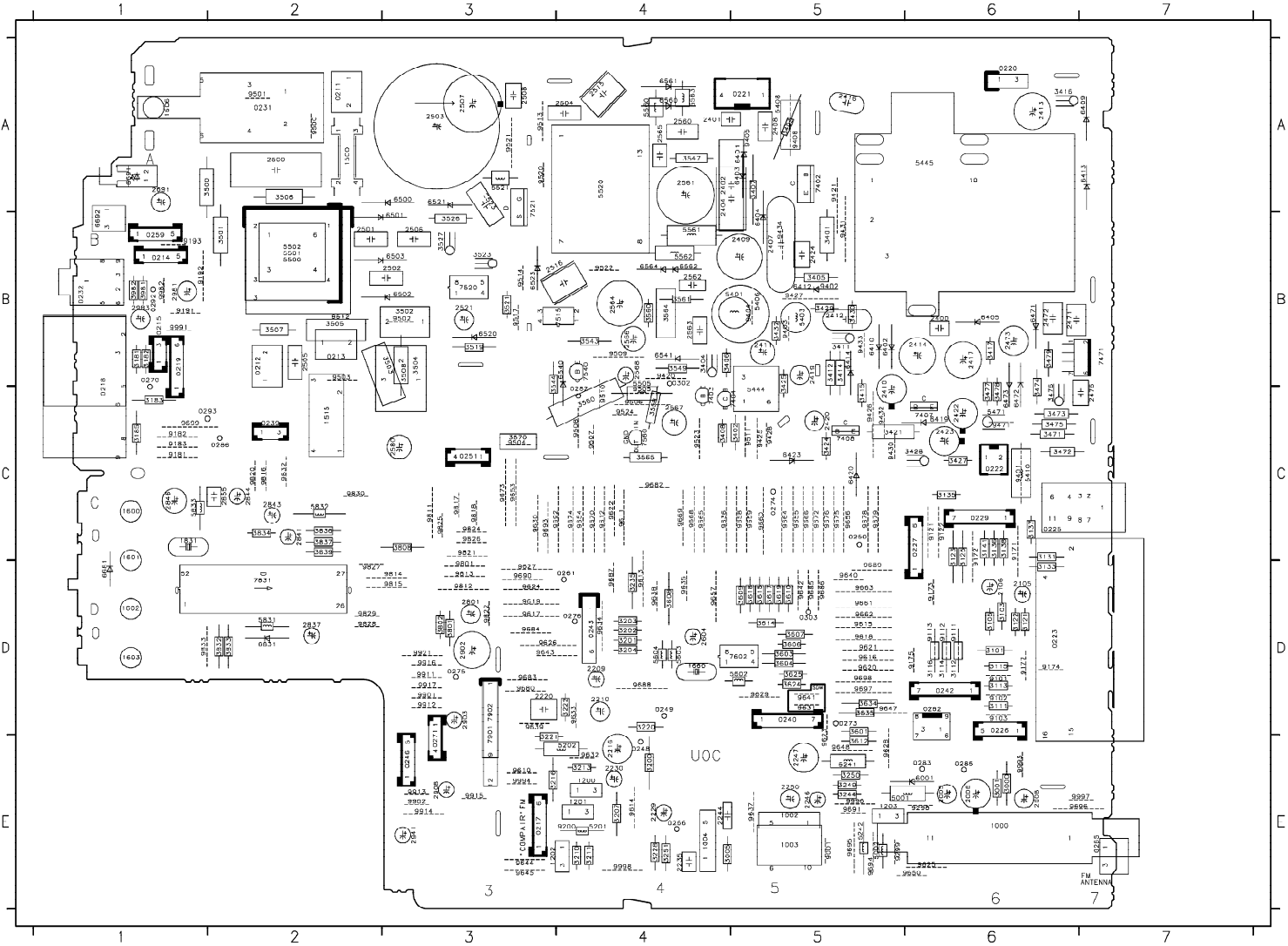
UOC
FM ANTENNA

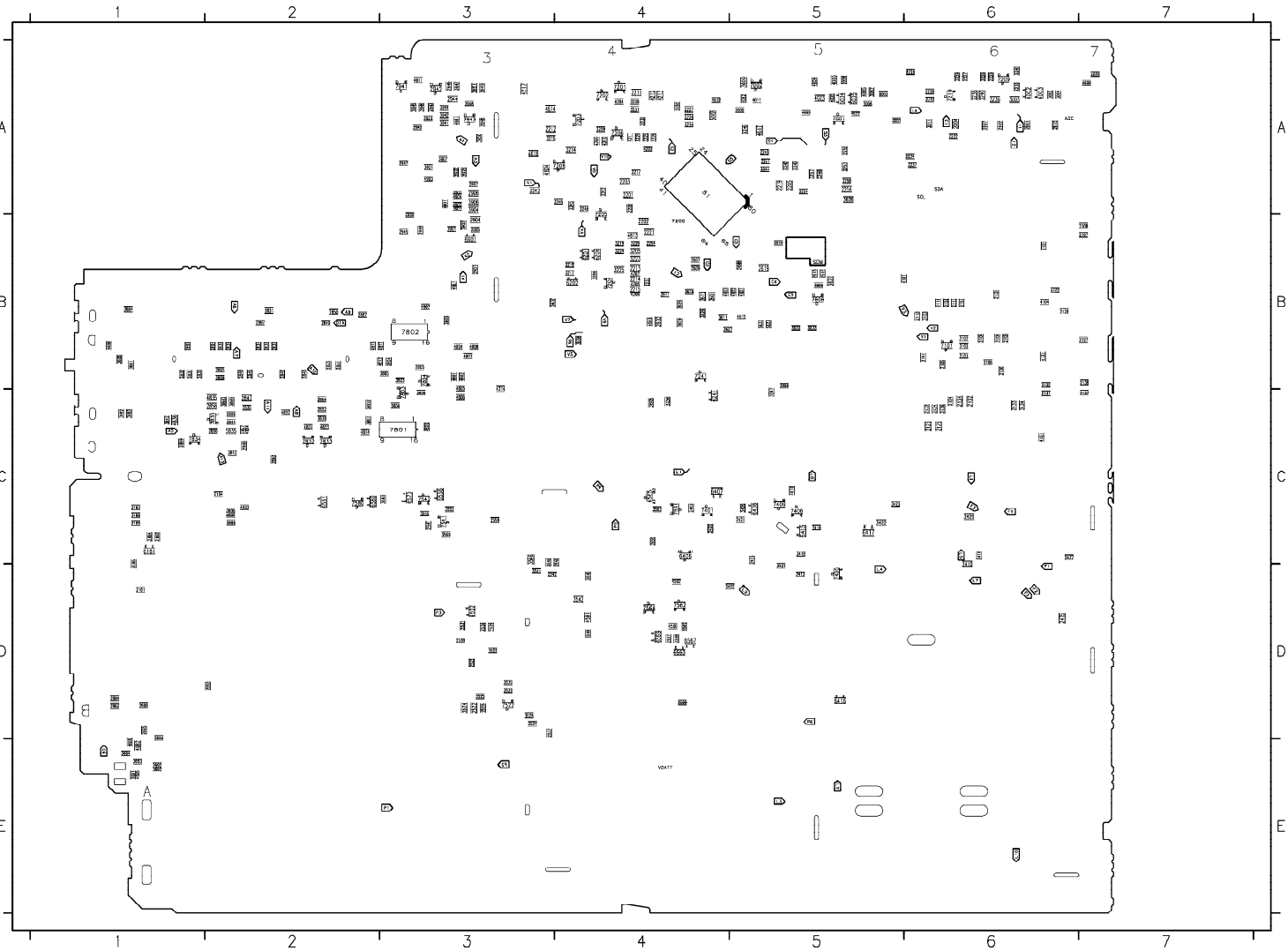
7802
7801

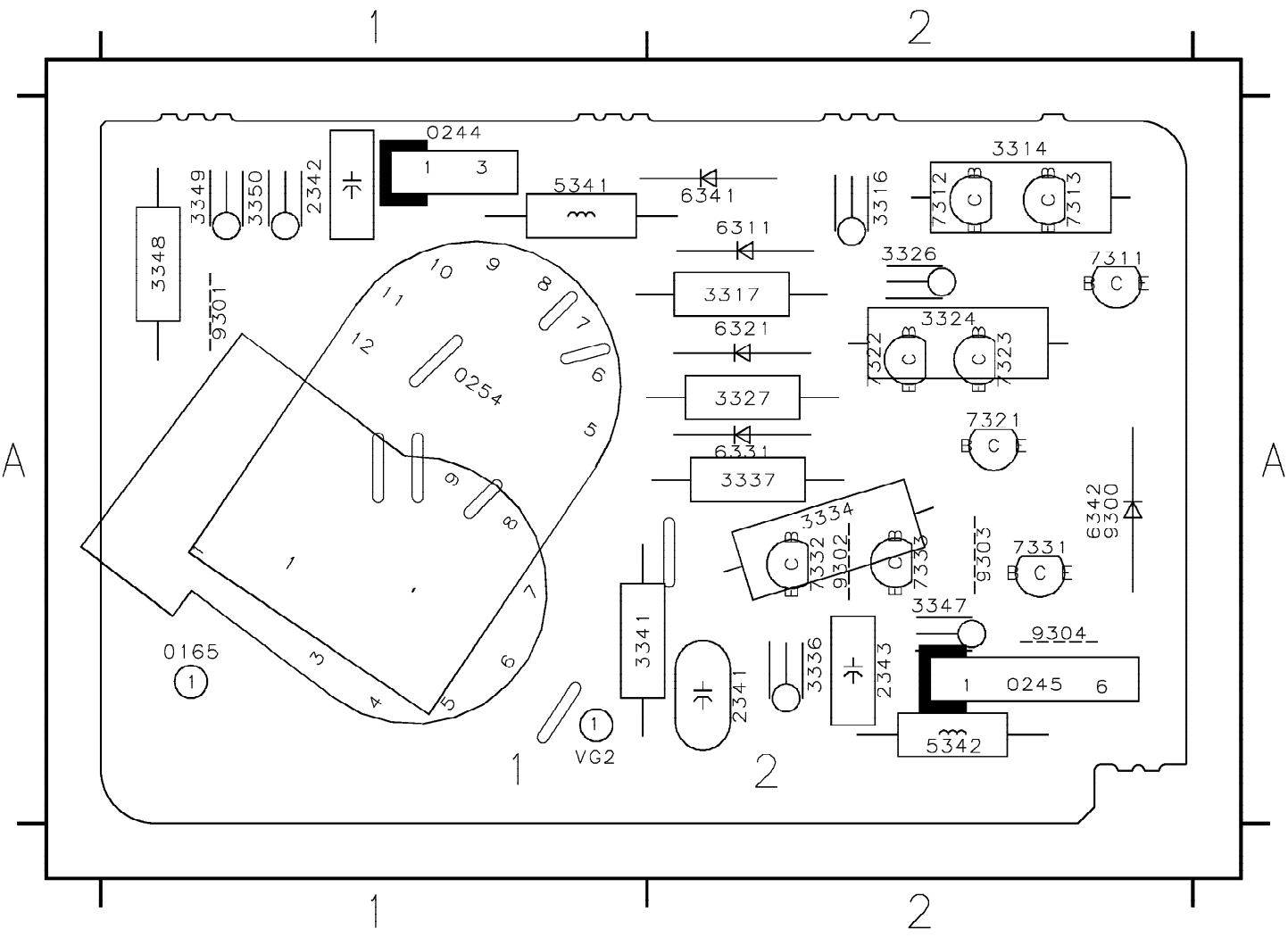

VG2 A1
0165 A1
0244 A1
0245 A2
0254 A1
1300 A1
2341 A2
2342 A1
2343 A2
3314 A2
3316 A2
3317 A2
3324 A2
3326 A2
3327 A2
3334 A2
3336 A2
3337 A2
3341 A1
3347 A2
3348 A1
3349 A1
3350 A1
5341 A1
5342 A2
6311 A2
6321 A2
6331 A2
6341 A2
6342 A2
7311 A2
7312 A2
7313 A2
7321 A2
7322 A2
7323 A2
7331 A2
7332 A2
7333 A2
9300 A2
9301 A1
9302 A2
9303 A2
9304 A2

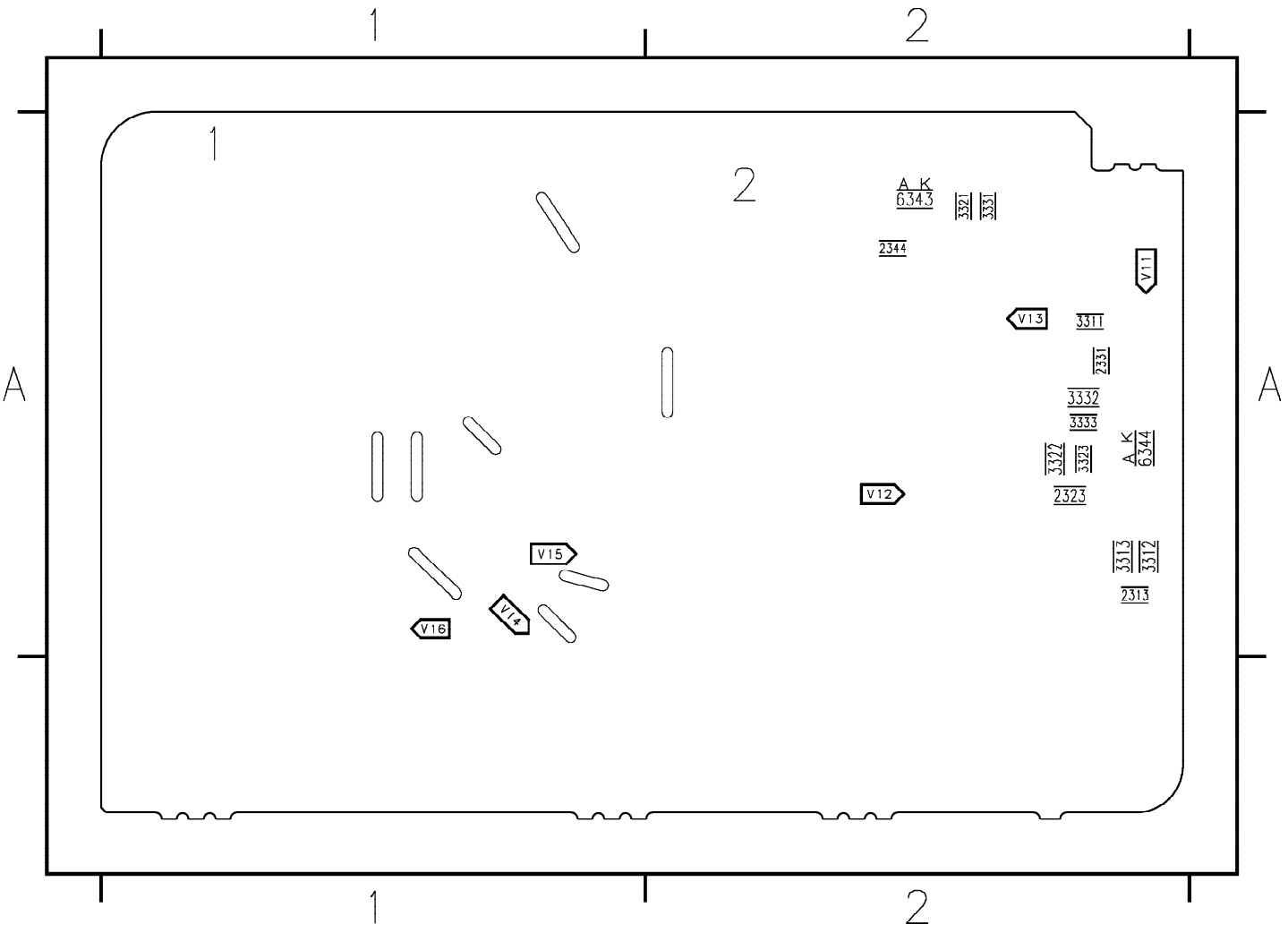

2313 A2
2323 A2
2331 A2
2344 A2
3311 A2
3312 A2
3313 A2
3321 A2
3322 A2
3323 A2
3331 A2
3332 A2
3333 A2
6343 A2
6344 A2

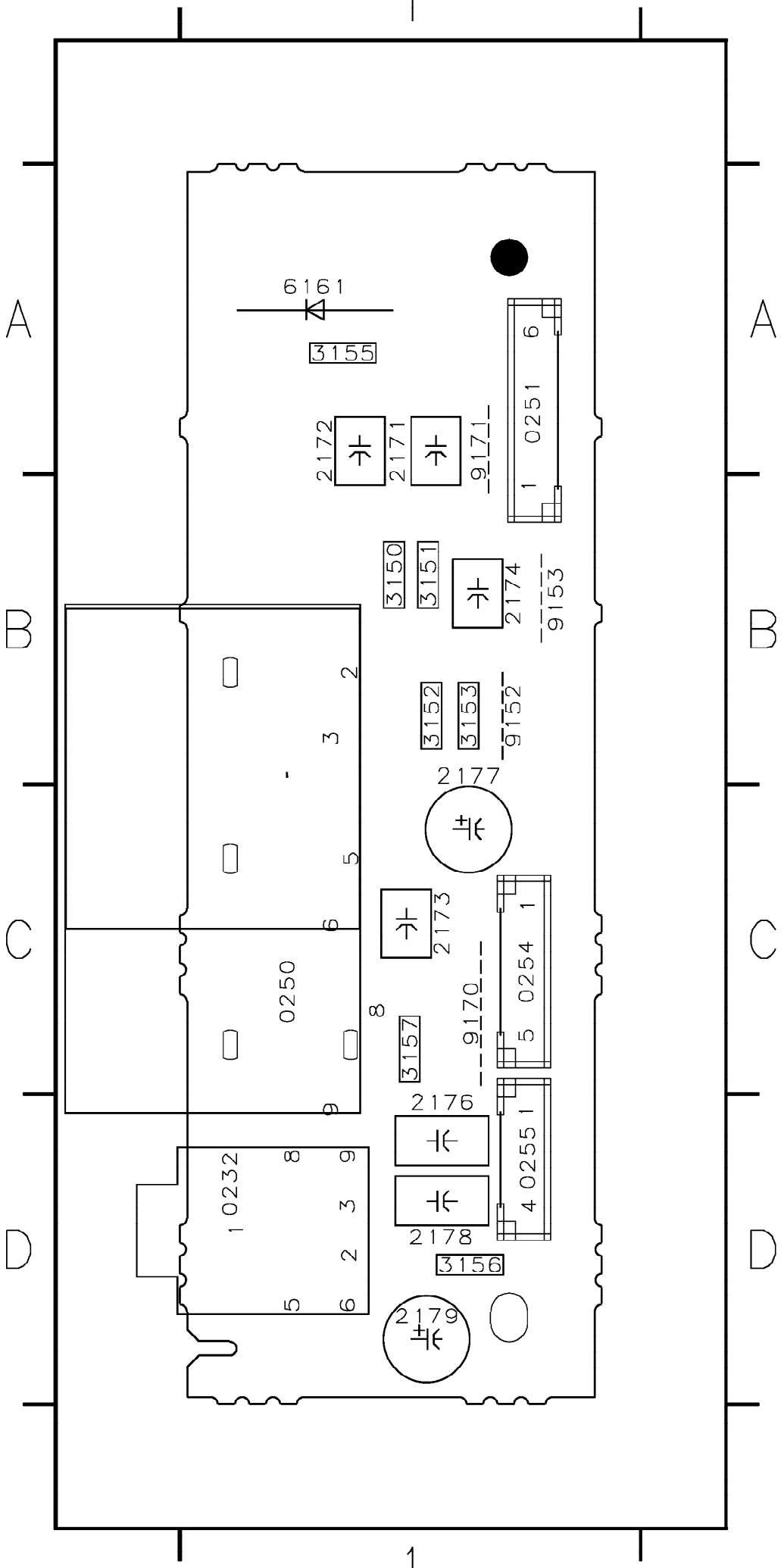

0232 D1
0250 C1
0251 A1
0254 C1
0255 D1
0277 B1
2171 A1
2172 A1
2173 C1
2174 B1
2176 D1
2177 B1
2178 D1
2179 D1
3150 B1
3151 B1
3152 B1
3153 B1
3155 A1
3156 D1
3157 C1
6161 A1
9152 B1
9153 B1
9170 C1
9171 A1